INOVANCE

FORWARD, ALWAYS PROGRESSING

MD810 Series AC Drive (Multidrive System)

Hardware Guide

Industrial Automation

Intelligent Elevator

New Energy Vehicle

Industrial Robot

Rail Transit

Data code 19011960A02

Preface

Introduction

The MD810 series is a new-generation low-voltage multidrive system. It is also a common DC bus drive system consisting of the power supply unit and the drive units, which can meet requirements of a single mechanical device with multiple drive points and continuous production line system. It is widely used in metal products, printing and packaging, textile printing and dyeing, chemical fiber and plastics, small-sized papermaking, hoisting and other industries.

The MD810 series AC drive (multidrive system) consists of the MD810 power supply unit and MD810 drive unit.

This guide describes the product information, mechanical design, electrical design, options, EMC FAQs, and certifications of the MD810 series.

More Information

Data Name	Data Code	Description
MD810 Series AC Drive (Multidrive System) Hardware Guide (this guide)	19011960	Describes the product information, mechanical design, electrical design, options, EMC FAQs, and certifications.
MD810 Series AC Drive (Multidrive System) Installation Guide	19011961	Describes the installation and wiring of the drive, including pre-installation preparations, unpacking and transportation, mechanical installation, and electrical installation.
MD800 Series AC Drive (Multidrive System) Function Guide	19011963	Describes the commissioning tools, maintenance, quick commissioning steps, communication, parameters, fault codes, and product functions and applications.

Revision History

Date	Version	Description
October 2024	A02	• Updated *"1.3.1 Technical specifications" on page 22*. • Updated *"1.3.2 Technical specifications of the drive unit" on page 24*. • Updated *"1.5 System Components" on page 33*. • Updated *"1.6 List of Options" on page 36*. • Updated *"2.2.3 Cabinet Cooling Design" on page 54*. • Updated *"3.1 Electrical Wiring Diagram" on page 62*. • Updated *"3.4 Main Circuit Cable Selection" on page 72*. • Updated *"4.9.2 Fuse, Contactor, and Circuit Breaker" on page 177*. • Updated *"4.9.7 AC Output Reactor" on page 189*. • Updated *"6.3 UL or cUL Certification" on page 215*. • Updated *" Appendix Requirements for Coolant and Circulation System of Water-Cooled Models" on page 219*. • Made minor corrections.

Revision Date	Version	Description
January 2024	A01	• Updated *" Front Cover" on page 1*, *" Preface" on page 1*, *" Fundamental Safety Instructions" on page 11*, and *" Back Cover" on page 222*. • Updated *"1.3.1 Technical specifications" on page 22* to include the following changes: 1. Updated the technical specifications of the power supply unit from three relay outputs to one relay output. 2. Updated “-10 to +50°C” to “-10°C to +50°C”. • Updated *"1.3.2 Technical specifications of the drive unit" on page 24* to include the following changes: 1. Updated “0 to 480 Vac” to “0 VAC to 480 VAC”. 2. Updated “0 to 500 Hz” to “0 Hz to 500 Hz”. 3. Updated “0 to 600 Hz” to “0 Hz to 600 Hz”. 4. Updated “-10 to +50°C” to “-10°C to +50°C”. 5. Updated the IP rating of 200 kW to 355 kW AC drive models from IP100 to IP20. • Updated *"1.4.1 Components of the Power Supply Unit" on page 29* to update the figure: Components of the power supply unit. • Updated *"1.5 System Components" on page 33* to update the figure: System architecture. • Updated *"1.6 List of Options" on page 36* to include the following changes: 1. Updated the option codes to add “0” to the original codes. 2. Updated the applicable models (110 kW to 160 kW) of the braking units. • Updated *"2.1.2 Layout and Dimension of the Drive Unit (Single-Axis)" on page 45* to categorize the drive units into water-cooling and air-cooling types. • Updated *"2.1.3 Layout and Dimension of the Drive Unit (Dual-Axis)" on page 48* to categorize the drive units into water-cooling and air-cooling types. • Updated *"3.1 Electrical Wiring Diagram" on page 62* to revise the electrical wiring diagram and change three relays to a single relay. • Updated *"3.5.1.3 Descriptions of Control Terminals for the Power Supply Unit" on page 86* to update “9 to 30 V” to “9 V to 30 V”. (Continued on next page)

		(Continued) • Updated *"3.5.2.1 Relationship Between Drive Unit (Single Axis) Models and Control Terminals" on page 91* to update the contents on the communication terminal CN4. • Update *"3.5.2.2 Control Terminal Arrangement of the Drive Unit (Single-Axis)" on page 93* to update the layout of G210 and G211 control terminals and remove the information about RS485 communication terminal. • Updated *"3.5.2.3 Descriptions of Control Terminals for the Drive Unit (Single-Axis)" on page 97* to include the following changes: 1. Updated “0 to 10 V” to “0 V to 10 V”. 2. Updated the mark of the 23-bit encoder pins. 3. Updated the figure of multi-encoder terminal (DB15). • Updated *"3.5.3.3 Descriptions of Control Terminals for the Drive Unit (Dual-Axis)" on page 111* to include the following changes: 1. Updated “0 to 10 V” to “0 V to 10 V”. 2. Updated the mark for Pin 6 of the PROFIBUS DP communication terminal (DB9) from C5V to C5V2. 3. Added information about the maximum number of nodes supported at different baud rates based on PROFIBUS DP-to-CAN communication. (Continued on next page)

Revision Date	Version	Description
January 2024	A01	(Continued) • Updated *"3.8.2 CAN Communication Connection" on page 128* to include the following changes: 1. Updated the description of product models and communication terminals. 2. Added the description of RJ45A/RJ45B terminals. 3. Updated the network topology description. 4. Added the description that CAN1 communication terminal of the power supply unit and RJ45 terminal are internally connected. 5. Added information about the maximum number of nodes supported at different baud rates based on CAN communication. • Added *"4.6 DC Soft Charge Unit" on page 167* to add the indicator description of INOV-SU series DC soft charge units. • Updated *"4.7 Braking Components" on page 170* to include the following changes: 1. Updated “380 to 480 V” to “380 V to 480 V”, “760V” to “760 VDC”, “200 to 240 V” to “200 V to 240 V”, “360 V” to “360 VDC”. 2. Updated the model numbers for the 22 kW and 45 kW power supply units to MD810-20M4T22G1XX and MD810-20M4T45G1XX, respectively. 3. Updated the braking unit for the 110 kW power supply unit to MDBUN-200-T, with a recommended braking resistor of 2.8 Ω (16 kW), a total of one braking resistor, and a minimum braking resistance of 2.5 Ω. 4. Updated the braking unit for the 110 kW power supply unit to MDBUN-200-5T, with a recommended braking resistor of 3.6 Ω (16 kW), a total of one braking resistor, and a minimum braking resistance of 2.8 Ω. 5. Updated the recommended braking resistor for the braking unit MDBUN-200-T to be 3.0 Ω (29 kW); and updated the recommended braking resistor for the braking unit MDBUN-200-5T to be 3.9 Ω (29 kW), with a minimum braking resistance of 3.0 Ω x 3.
May 2022	A00	Initial release.

Access to the Guide

This guide is not in the scope of delivery. If necessary, you can download the PDF file in three ways:

- Do keyword search under Service and Support at *http://www.inovance.com*.
- Scan the QR code with a smartphone to obtain the document.
- Scan the QR code below to install the app, where you can search for and download manuals.

Warranty Disclaimer

If your product becomes defective under normal use conditions, we will offer guaranteed repair services within the warranty period. Maintenance will be charged after the warranty expires.

The warranty does not cover any defect caused by:

- Damage caused by operations not following the instructions in the user guide
- Damage caused by fire, flood, or unusual voltage
- Damage caused by unintended use of the product
- Damage caused by use beyond the specified scope of application of the product
- Damage or secondary damage caused by force majeure (natural disaster, earthquake, and lightning strike)

The maintenance is charged according to the latest Price List of Inovance. If otherwise agreed upon, the terms and conditions in the agreement shall prevail.

For details, see Product Warranty Card.

Table of Contents

Preface 1
Fundamental Safety Instructions 11
1 Product Information 18
1.1 Nameplate and Model 18
1.1.1 Power Supply Unit Nameplate and Model 18
1.1.2 Drive Unit Nameplate and Model 19
1.2 Product Models 21
1.3 Technical Specifications 22
1.3.1 Technical specifications 22
1.3.2 Technical specifications of the drive unit 24
1.4 Component Description 29
1.4.1 Components of the Power Supply Unit 29
1.4.2 Components of the Drive Unit 30
1.5 System Components 33
1.6 List of Options 36
1.7 Model Selection 39
1.7.1 System selection flow 39
1.7.2 Load and Motor Selection 39
1.7.3 Drive Unit Selection 40
1.7.4 Power Supply Unit Selection 40
1.7.5 System Combination and Arrangement 41
2 Mechanical Design 44
2.1 Layout and Dimension 44
2.1.1 Layout and Dimension of the Power Supply Unit 44
2.1.2 Layout and Dimension of the Drive Unit (Single-Axis) 45
2.1.3 Layout and Dimension of the Drive Unit (Dual-Axis) 48
2.2 Cabinet Design 49
2.2.1 Clearance Requirements 49
2.2.2 Mounting Backplate Design Requirements 51
2.2.3 Cabinet Cooling Design 54
3 Electrical Design 62
3.1 Electrical Wiring Diagram 62
3.2 Layout and Description of Main Circuit Terminals 64
3.2.1 Arrangement and Definition of Main Circuit Terminals for the Power Supply Unit 64
3.2.2 Arrangement and Definition of Main Circuit Terminals for the Drive Unit (Single-Axis) 66

3.2.3 Arrangement and Definition of Main Circuit Terminals for the Drive Unit (Dual-Axis) . . . 68
3.3 Wiring Descriptions of Main Circuit Terminals . . . 69
3.4 Main Circuit Cable Selection . . . 72
3.5 Layout and Description of Control Circuit Terminals . . . 83
3.5.1 Layout and Description of Control Circuit Terminals for the Power Supply Unit 83
3.5.1.1 Relationship Between Power Supply Unit Models and Control Terminals. 83
3.5.1.2 Arrangement of Control Terminals for the Power Supply Unit . . . 84
3.5.1.3 Descriptions of Control Terminals for the Power Supply Unit. . . . 86
3.5.2 Layout and Description of Control Terminals for the Drive Unit (Single-Axis) . . . 91
3.5.2.1 Relationship Between Drive Unit (Single Axis) Models and Control Terminals . . . 91
3.5.2.2 Control Terminal Arrangement of the Drive Unit (Single-Axis) . . . 93
3.5.2.3 Descriptions of Control Terminals for the Drive Unit (Single-Axis). . . . 97
3.5.3 Layout and Description of Control Terminals for the Drive Unit (Dual-Axis) . . . 106
3.5.3.1 Relationship Between Drive Unit (Dual-axis) Models and Control Terminals . . . 106
3.5.3.2 Control Terminal Arrangement of the Drive Unit (Dual-Axis). . . . 108
3.5.3.3 Descriptions of Control Terminals for the Drive Unit (Dual-Axis) . . . 111
3.6 Cable Selection and Wiring Requirements for Control Circuits . . . 117
3.7 Wiring of I/O Signal Terminals . . . 118
3.7.1 Wiring the DI . . . 118
3.7.2 Wiring the DIO1 and DIO2. . . . 119
3.7.3 Wiring the AI . . . 120
3.7.4 Wiring the AO . . . 123
3.7.5 Relay Output Terminals . . . 123
3.8 Communication Connection . . . 125
3.8.1 RS485 Communication Connection . . . 125
3.8.2 CAN Communication Connection. . . . 128
3.8.3 PROFIBUS DP and PROFIBUS DP-to-CAN Communication Connection . . . 133
3.8.4 PROFINET-to-CAN Communication Connection . . . 136
3.8.5 EtherCAT Communication Connection . . . 138
3.9 Encoder Signal Connection . . . 140
3.9.1 Wiring the ABZ Encoders . . . 140
3.9.1.1 Encoder Terminals and Specifications . . . 140
3.9.1.2 Differential Input Wiring . . . 141
3.9.1.3 Collector Input Wiring . . . 144
3.9.1.4 Push-Pull Input Wiring . . . 145
3.9.1.5 Distinguishing Collector Output Encoders from Push-Pull Output Encoders . . . 146
3.9.2 Wiring Resolver Encoders. . . . 147
3.9.3 Wiring the Sin-Cos Encoder . . . 149
3.9.4 Wiring Inovance 23-Bit Communication Encoders . . . 150

3.9.5 Wiring the SSI Encoder . . . 152
3.9.6 Incremental Frequency Division Output . . . 155
3.9.7 Selecting Filter Modes . . . 156
3.10 Wiring STO Terminals . . . 157
3.11 Grounding . . . 159
3.11.1 Grounding the Control Board . . . 159
3.11.2 Grounding a Single Device . . . 160
3.11.3 Grounding Multiple Devices . . . 161
3.11.4 Grounding the Cabinet System . . . 162
4 Option Selection . . . 164
4.1 Co-bus External Power Terminal . . . 164
4.2 Through-Hole Mounting Bracket . . . 164
4.3 Air Guide Plate . . . 165
4.4 Ground Bracket of Cable Shield . . . 165
4.5 External LCD Operating Panel . . . 166
4.6 DC Soft Charge Unit . . . 167
4.7 Braking Components . . . 170
4.8 PROFIBUS DP Bus Adapter . . . 174
4.9 Peripheral Electrical Components . . . 175
4.9.1 List of Peripheral Components . . . 175
4.9.2 Fuse, Contactor, and Circuit Breaker . . . 177
4.9.3 Cable Lug . . . 177
4.9.4 Bus fuse . . . 184
4.9.5 DC Circuit Breaker . . . 185
4.9.6 AC Input Reactor . . . 185
4.9.7 AC Output Reactor . . . 189
4.9.8 EMC Filter . . . 198
4.9.9 Simple Filter . . . 203
4.9.10 Magnetic Ring and Ferrite Clamp . . . 204
5 Solutions to Common EMC Problems . . . 209
5.1 Residual Current Device Malfunction . . . 209
5.2 Harmonic Suppression . . . 210
5.3 Common I/O Signal Interference . . . 210
5.4 Communication Interference . . . 210
5.4.1 RS485 and CAN Communication Interference . . . 210
5.4.2 EtherCAT, PROFINET and EtherNet/IP Communication Interference . . . 211
6 Certification and Standard Requirements . . . 212
6.1 Certifications, Directives, and Standards . . . 212
6.2 CE Certification . . . 212

6.2.1 Precautions for Compliance with European Standards 212
6.2.2 Requirements for Compliance with EMC 213
6.2.3 Requirements for Compliance with LVD 215
6.3 UL or cUL Certification 215
6.4 KC Certification 218
Appendix Requirements for Coolant and Circulation System of Water-Cooled Models 219

Fundamental Safety Instructions

Safety disclaimer

- This section describes the safety precautions that help you use this product correctly. Before using this product, read the user guide thoroughly and correctly understand the related safety precautions. Failure to observe the safety precautions may result in serious injuries or death of personnel or device damage.
- "DANGER", "WARNING", and "DANGER" items in the user guide do not indicate all safety precautions that need to be followed; instead, they just supplement the safety precautions.
- Use this equipment according to the designated environment requirements. Damage caused by improper use is not covered by warranty.
- Inovance shall take no responsibility for any personal injuries or property damage caused by improper use.

Safety Levels and Definitions

DANGER Indicates that failure to comply with the notice will result in severe personal injuries or even death.

WARNING Indicates that failure to comply with the notice may result in severe personal injuries or even death.

CAUTION Indicates that failure to comply with the notice may result in minor or moderate personal injuries or equipment damage.

Safety precautions

- Product illustrations in the user guide are sometimes shown without covers or protective guards. Remember to install the covers or protective guards as specified first, and then perform operations in accordance with the instructions.
- Product illustrations in this guide are for reference only. Actual products may vary.
- Personnel must take mechanical precautions to protect personal safety. Wear necessary protective safety gear, such as anti-smashing shoes, clothing, glasses, gloves, and sleeves.

Unpacking
WARNING • Do not install the equipment if you find damage, rust, or signs of use on the equipment or accessories upon unpacking. • Do not install the equipment if you find water seepage or missing or damaged components upon unpacking. • Do not install the equipment if you find the packing list does not conform to the equipment you received.
CAUTION • Check whether the packing is intact and whether there is damage, water seepage, damp, and deformation. • Unpack the package by following the unpacking sequence. Do not hit the package with force. • Check whether there is damage, rust, or injuries on the surface of the equipment or equipment accessories. • Check whether the number of packing materials is consistent with the packing list.
Storage and transportation
WARNING • Large-scale or heavy equipment must be transported by qualified professionals using specialized hoisting equipment. Failure to comply may result in personal injury or equipment damage. • Before hoisting the equipment, ensure the equipment components such as the front cover and terminal blocks are secured properly and firmly with screws. Loosely-connected components may fall off and result in personal injuries or equipment damage. • Never stand or stay below the equipment when the equipment is being hoisted by the hoisting equipment. • When hoisting the equipment with a steel rope, ensure the equipment is hoisted at a constant speed without suffering from vibration or shock. Do not turn the equipment over or let the equipment stay hanging in the air. Failure to comply may result in personal injuries or equipment damage.

CAUTION

- Handle the equipment with care during transportation and mind your steps to prevent personal injuries or equipment damage.
- When carrying the equipment with bare hands, hold the equipment casing firmly with care to prevent parts from falling. Failure to comply may result in personal injuries.
- Store and transport the equipment based on the storage and transportation requirements. Failure to comply can result in equipment damage.
- Store and transport the product in environments free from water splashes, rain exposure, direct sunlight, strong electric and magnetic fields, and excessive vibration.
- Store the product for no more than 3 months. For longer storage periods, implement stricter protective measures and conduct necessary inspections.
- Before transportation, ensure the product is packed securely. For long-distance shipping, use airtight packaging.
- Always transport the product separately from any items or substances that could potentially damage or negatively affect its performance.

Installation

DANGER

- The equipment must be operated only by professionals with electrical knowledge. Operations by others are prohibited.

WARNING

- Read through the guide and safety instructions before installation.
- Do not install the product in places with strong electric or magnetic fields.
- Before installation, ensure that the installation position has sufficient mechanical strength to support the weight of the device. Failure to comply will result in a mechanical danger.
- Do not wear loose clothes or accessories during installation. Failure to comply may result in an electric shock.
- When installing the equipment in a closed environment (such as a cabinet or casing), use a cooling device (such as a fan or air conditioner) to cool the environment down to the required temperature. Failure to comply may result in equipment over-temperature or a fire.
- Do not retrofit the equipment.
- Do not fiddle with the bolts used to fix equipment components or the bolts marked in red.
- When the equipment is installed in a cabinet or final assembly, a fireproof enclosure providing both electrical and mechanical protections must be provided. The IP rating must meet IEC standards and local laws and regulations.
- Before installing devices with strong electromagnetic interference, such as a transformer, install a shielding device for the equipment to prevent malfunction.
- Install the product on an incombustible object such as metal and do not touch or attach the product to combustible objects. Failure to comply can result in fire accident.

CAUTION

- Cover the top of the equipment with a piece of cloth or paper during installation. This is to prevent unwanted objects such as metal chippings, oil, and water from falling into the equipment and causing faults. After the installation is completed, remove the protective guard. Failure to comply will block the vent and affect heat dissipation, causing overheat of the product.
- Resonance may occur when the equipment operating at a constant speed executes variable speed operations. In this case, install the vibration-proof rubber under the motor frame or use the vibration suppression function to reduce resonance.

Wiring

DANGER

- Equipment installation, wiring, maintenance, inspection, or parts replacement must be performed only by professionals.
- Before wiring, disconnect all the power supplies of the equipment, Wait for at least the time designated on the equipment warning label before further operations because residual voltage still exists after power-off. Measure the direct voltage of the main circuit and ensure that the voltage is within the safety range. Failure to comply will result in an electric shock.
- Do not perform wiring, remove the equipment cover, or touch the circuit board with power ON. Failure to comply will result in an electric shock.
- Make sure that the equipment is reliably grounded. Failure to comply will result in an electric shock.

WARNING

- Do not connect the input power supply to the output end of the equipment. Failure to comply will result in equipment damage or even a fire.
- When connecting a drive to the motor, check that the phase sequences of the drive and motor terminals are consistent to prevent reverse motor rotation.
- Cables used for wiring must meet cross sectional area and shielding requirements. The shield of the cable must be reliably grounded at one end.
- Fix the terminal screws with the tightening torque specified in the user guide. Improper tightening torque may overheat or damage the connecting part, resulting in a fire.
- After wiring is done, check that all cables are connected properly and no screws, washers or exposed cables are left inside the equipment. Failure to comply may result in electric shock or equipment damage.

CAUTION

- During wiring, follow the proper electrostatic discharge (ESD) procedures, and wear an antistatic wrist strap. Failure to comply will result in damage to internal equipment circuits.
- Use shielded twisted pairs for the control circuit. Connect the shield to the grounding terminal of the equipment for grounding purpose. Failure to comply can result in equipment malfunction.

Power-on

DANGER

- Before power-on, check that the equipment is installed properly with reliable wiring and the motor can be restarted.
- Check that the power supply meets equipment requirements before power-on to prevent equipment damage or fire accident.
- Do not open the cabinet door or protective cover of the product, touch any wiring terminal of the product, or remove any part of the product with power on. Failure to comply can result in an electric shock.

WARNING

- Perform a trial run after wiring and parameter setting to ensure the equipment operates safely. Failure to comply may result in personal injuries or equipment damage.
- Before power-on, check that the rated voltage of the equipment is consistent with that of the power supply. Failure to comply may result in a fire.
- Before power-on, check that no one is near the equipment, motor, or other mechanical parts. Failure to comply may result in personal injuries or even death.

Operation

DANGER

- The equipment must be operated only by professionals. Failure to comply can result in death or personal injury.
- Do not touch any connecting terminals or disassemble any unit or component of the equipment during operation. Failure to comply can result in an electric shock.

WARNING

- Do not touch the equipment casing, fan, or resistor with bare hands to feel the temperature. Failure to comply may result in personal injuries.
- Prevent metal or other objects from falling into the equipment during operation. Failure to comply may result in a fire or equipment damage.

Maintenance

DANGER

- Equipment installation, wiring, maintenance, inspection, or parts replacement must be performed only by professionals.
- Do not maintain the equipment with power on. Failure to comply can result in an electric shock.
- Before maintenance, cut off all equipment power supplies and wait as specified on the product warning sign.
- In case of a synchronous motor, do not touch the motor terminals even after power-off because there is still induced voltage generated during rotation. Failure to comply will result in an electric shock.

WARNING

- Perform routine and periodic inspection and maintenance on the equipment in accordance with maintenance requirements and keep a maintenance record.

Repair

DANGER

- Equipment installation, wiring, maintenance, inspection, or parts replacement must be performed only by professionals.
- Do not maintain the equipment with power on. Failure to comply can result in electric shock.
- Before inspection and repair, cut off all equipment power supplies and wait as specified on the product warning sign.

WARNING

- Require for repair services in accordance with the product warranty agreement.
- When the fuse is blown or the circuit breaker or residual current device (RCD) trips, wait for at least the time designated on the equipment warning label before power-on or further operations. Failure to comply may result in death, personal injury or equipment damage.
- When the equipment is faulty or damaged, the troubleshooting and repair work must be performed by professionals that follow the repair instructions, with repair records kept properly.
- Replace quick-wear parts of the equipment in according with the replacement instructions.
- Do not operate damaged equipment. Failure to comply may result in worse damage.
- After the equipment is replaced, perform wiring inspection and parameter settings again.

Disposal

WARNING

- Dispose of retired equipment in accordance with local regulations and standards. Failure to comply may result in property damage, personal injuries, or even death.
- Recycle retired equipment by observing industry waste disposal standards to avoid environmental pollution.

Safety label

To ensure safe operations, comply with safety signs on the device, and do not damage or remove the safety labels. The following table describes the safety signs.

Safety Sign	Description
	• Before using the product, read the user guide and safety precautions carefully. Failure to comply will result in personnel injuries or death or product damage. • Do not touch the terminals or remove the cover with power ON or within 10 min after power-off. Failure to comply will result in an electric shock.

1 Product Information

1.1 Nameplate and Model

1.1.1 Power Supply Unit Nameplate and Model

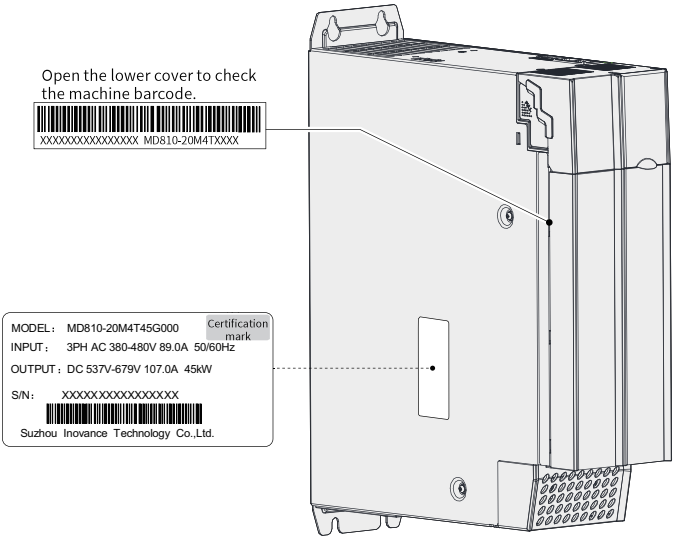

Figure 1-1 Power supply unit nameplate

Note

The nameplate is used as an example. The actual nameplate is subject to the product.

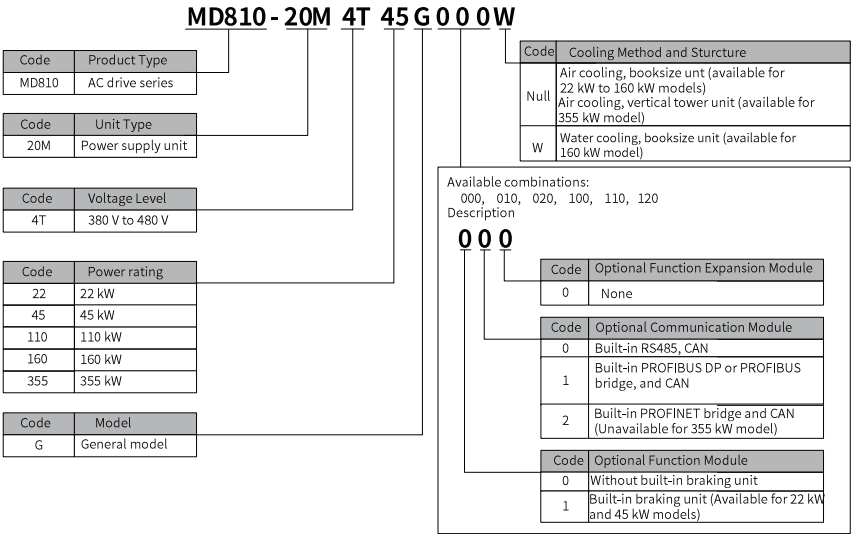

Figure 1-2 Power supply unit model

1.1.2 Drive Unit Nameplate and Model

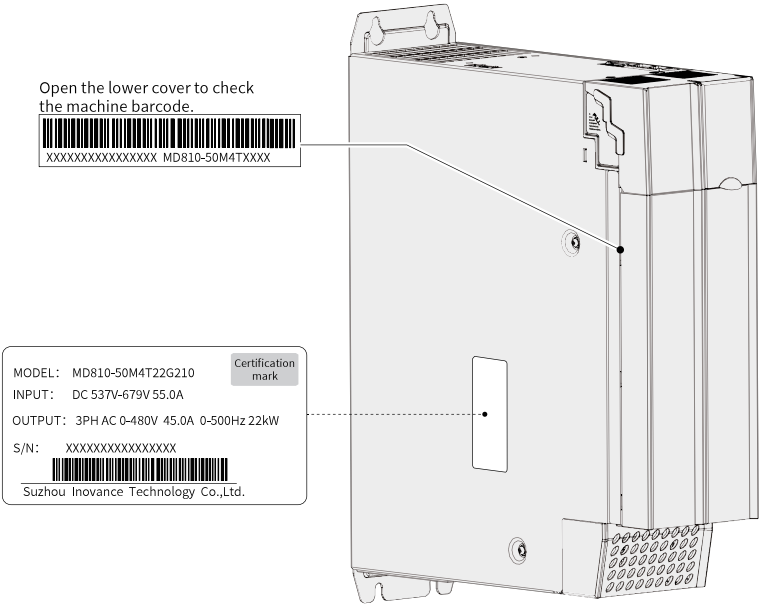

Figure 1-3 Drive unit nameplate

Note

The nameplate is used as an example. The actual nameplate is subject to the product.

MD810 - 50M 4T D 45 G 0 0 0 W

Code	Product Type
MD810	AC drive series

Code	Unit Type
50M	Drive unit

Code	Voltage Level
4T	380 V to 480 V

Code	Axis Type
Null	Single-axis
D	Dual-axis

Code	Power rating
1.5	1.5 kW
…	…
355	355 kW

Code	Model
G	General model

Code	Cooling Method and Sturcture
Null	Air cooling, booksize unt (available for 1.5 kW to 160 kW models)
H	Air cooling, vertical tower unit (available for 200 kW to 355 kW models)
W	Water cooling, booksize unit, available for 11 kW to 37 kW models (single-axis) and 7.5 kW to 18.5 kW models (dual-axis)

Available combinations:
200, 201, 210, 211, 300, 400, 530, 531

Description

2 0 0

Code	Optional Function Expansion Module
0	None
1	Buil-in STO (available for 1.5 kW to 160 kW models)

Code	Optional Communication Module
0	Built-in RS485, CAN
1	Built-in PROFIBUS DP and CAN
3	Built-in EtherCAT (available for 1.5 kW to 160 kW models) and CAN

Code	Optional Function Module
2	Built-in ABZ encoder terminal
3	Built-in 23-bit encoder terminal
4	Built-in ABZ encoder terminal Built-in resolver encoder terminal, supporting the resolver encoder and incremental frequency division output
5	Built-in ABZ encoder terminal Built-in multi-encoder terminal, supporting 5 V differential ABZ, 23-bit, sin-cos, and SSI encoders and incremental frequency division output

Figure 1-4 Drive unit model

1.2 Product Models

Category	Structure	Width	Power Range	Product Model
Power supply unit	Booksize	50 mm	22 kW	MD810-20M4T22GXXX
		100 mm	45 kW	MD810-20M4T45GXXX
		200 mm	110 kW	MD810-20M4T110GXXX
		300 mm	160 kW	MD810-20M4T160GXXX(W)
	Vertical tower	180 mm	355 kW	MD810-20M4T355G000 MD810-20M4T355G010
Drive unit (single-axis)	Booksize	50 mm	1.5 kW to 7.5 kW	MD810-50M4T1.5GXXX
				MD810-50M4T2.2GXXX
				MD810-50M4T3.7GXXX
				MD810-50M4T5.5GXXX
				MD810-50M4T7.5GXXX
		100 mm	11 kW to 37 kW	MD810-50M4T11GXXX (W)
				MD810-50M4T15GXXX (W)
				MD810-50M4T18.5GXXX(W)
				MD810-50M4T22GXXX(W)
				MD810-50M4T30GXXX (W)
				MD810-50M4T37GXXX (W)
		200 mm	45 kW to 75 kW	MD810-50M4T45GXXX
				MD810-50M4T55GXXX
				MD810-50M4T75GXXX
		300 mm	90 kW to 160 kW	MD810-50M4T90GXXX
				MD810-50M4T110GXXX
				MD810-50M4T132GXXX
				MD810-50M4T160GXXX
	Vertical tower	230 mm	200 kW to 355 kW	MD810-50M4T200G200H
				MD810-50M4T200G210H
				MD810-50M4T250G200H
				MD810-50M4T250G210H
				MD810-50M4T315G200H
				MD810-50M4T315G210H
				MD810-50M4T355G200H
				MD810-50M4T355G210H
Drive unit (dual-axis)	Booksize	50 mm	1.5 kW to 5.5 kW	MD810-50M4TD1.5GXXX
				MD810-50M4TD2.2GXXX
				MD810-50M4TD3.7GXXX
				MD810-50M4TD5.5GXXX
		100 mm	7.5 kW to 18.5 kW	MD810-50M4TD7.5GXXX(W)
				MD810-50M4TD11GXXX (W)
				MD810-50M4TD15GXXX (W)
				MD810-50M4TD18.5GXXX(W)

1.3 Technical Specifications

1.3.1 Technical specifications

Table 1–1 Rated specifications

Power Supply Unit Model	Rated Power (kW)	Power Capacity (kVA)	Input Current AC (A)	Output Current DC (A)	Braking Unit	Thermal Power (W)
Three-phase 380-480 V, 50 Hz/60 Hz (47-63 Hz)						
MD810-20M4T22GXXX	22	45	49	56	• MD810-20M4T22G1XX: built-in braking unit • MD810-20M4T22G0XX: Braking function is not supported[Note1].	176
MD810-20M4T45GXXX	45	81	89	107	• MD810-20M4T45G1XX: built-in braking unit • MD810-20M4T45G0XX: Braking function is not supported[Note1].	290
MD810-20M4T110GXXX	110	179	196	240	(Optional) External MDBUN	590
MD810-20M4T160GXXX(W)	160	267	292	358	(Optional) External MDBUN	880
MD810-20M4T355GXXX	355	566	619	759	(Optional) External MDBUN	1525

Note

[Note 1]: The following power supply units do not include the braking function, since they are not equipped with built-in braking units and external braking units are also not recommended. For braking function, select other models.

- MD810-20M4T22G0XX
- MD810-20M4T45G0XX

Table 1–2 Technical specifications

Items		Specifications
Basic parameters	Power grid voltage	Three-phase 380 VAC to 480 VAC: 323 VAC to 528 VAC (-15% to 10%)
	Power range	22 kW, 45 kW, 110 kW, 160 kW, 355 kW
	Grid type	TN, TT, IT (Y)
	Input frequency	50 Hz/60 Hz (47-63 Hz)
	Braking	The additional braking resistor and braking unit are used for braking. (Note: Some models are equipped with built-in braking unit. No need for additional braking units. For details, see *"4.7 Braking Components" on page 170*.)
Customized functions	Communication/Bus	Different models support different communication protocols. For details, see the optional communication components in *"Figure 1–2 " on page 19* . Communication protocols are described as follows: • Modbus-RTU: Maximum baud rate of 115200; 128 nodes; maximum communication distance of 1000 m • PROFIBUS DP: Baud rate of 12 Mbps; 32 nodes; maximum communication distance of 100 m • CANopen: Baud rate of 1 Mbps; 64 nodes; maximum communication distance of 40 m • CANlink: Baud rate of 1 Mbps; 18 nodes; maximum communication distance of 20 m • PROFINET: Baud rate of 100 Mbps: 65535 nodes; maximum communication distance of 100 m
HMI	Digital input/output	• 1 common multi-functional input terminal; programmable; isolated sink/source input; operating voltage range: 9-30 V; invalid voltage: < 5 V; input impedance: 3 kΩ; meeting the requirements for 100 Hz frequency input • 1 relay output terminals; programmable NO/NC contacts
	Operating panel display	Standard 5-digit LED display, 5 keys
Environment	Ambient temperature	Operating temperature: -10°C to 40°C, with temperature change rate lower than 0.5°C/min (Derating is required for temperatures above 40°C. For temperatures above 40°C and lower than 50°C (maximum temperature), derate 1.5% for every additional 1°C.)
		Storage temperature: –25°C to +70°C
		Transportation temperature: –25°C to +70°C
	Relative humidity	Humidity change range: 5%–95%
		Relative humidity for storage: 5% to 95%.
		Relative humidity for transportation: lower than 95% at +40 °C
	Altitude	Star power grid: maximum 3000 m • ⩽ 1000 m (3281 ft): derating not required • > 1000 m (3281 ft): derated by 1% for every additional 100 m (328.1 ft)
Vibration	• Application scenario: Tested according to IEC 60068-2-6 Amplitude at 5 Hz to 8.4 Hz: 3.5 mm; acceleration at 8.4 Hz to 200 Hz: 1 g; 10 cycles/axis • Transportation scenario: Tested according to IEC 60068-2-64 Power spectrum density at 5 Hz to 100 Hz: 0.01 g^2/Hz; power spectrum density at 200 Hz: 0.001 g^2/Hz; Grms: 1.14 g	
Shock	Usage/transportation scenario: Tested according to IEC 60068-2-27 Acceleration: 15 g; pulse width: 11 ms; 18 times in total in each of X, Y, Z axes	

Items	Specifications
Protection function	Overtemperature protection, power phase loss protection, detection protection against three-phase input voltage unbalance, overvoltage protection, braking circuit overcurrent protection, braking resistor short circuit protection, and braking transistor direct connection detection
Overvoltage class	OVC III
Pollution degree	PD2
IP rating	IP00
Protection class	Class I
Cooling mode	Air cooling or water cooling Different models support different cooling modes. For details, see *"Figure 1–2 " on page 19* .

1.3.2 Technical specifications of the drive unit

Table 1–3 Rated specifications of the drive unit (single-axis)

Drive Unit Model	Rated power kW	Input current DC (A)	Output current AC (A)	Applicable motor		Thermal Loss (W)
				kW	HP	
537 VDC to 679 VDC (Working range: 350 VDC to 800 VDC) Output voltage: 0 VAC to 480 VAC						
MD810-50M4T1.5GXXX	1.5	4.9	3.8	1.5	2	47
MD810-50M4T2.2GXXX	2.2	7	5.1	2.2	3	59
MD810-50M4T3.7GXXX	3.7	12	9	3.7	5	76
MD810-50M4T5.5GXXX	5.5	17	13	5.5	7.5	127
MD810-50M4T7.5GXXX	7.5	22	17	7.5	10	155
MD810-50M4T11GXXX (W)	11	31	25	11	15	249
MD810-50M4T15GXXX (W)	15	40	32	15	20	294
MD810-50M4T18.5GXXX(W)	18.5	46	37	18.5	25	343
MD810-50M4T22GXXX(W)	22	55	45	22	30	425
MD810-50M4T30GXXX (W)	30	73	60	30	40	526
MD810-50M4T37GXXX (W)	37	90	75	37	50	669
MD810-50M4T45GXXX	45	105	91	45	60	817
MD810-50M4T55GXXX	55	129	112	55	70	1033
MD810-50M4T75GXXX	75	172	150	75	100	1379
MD810-50M4T90GXXX	90	205	184	90	125	1434
MD810-50M4T110GXXX	110	245	224	110	150	1801
MD810-50M4T132GXXX	132	290	262	132	180	2178
MD810-50M4T160GXXX	160	335	304	160	220	2405

Drive Unit Model	Rated power kW	Input current DC (A)	Output current AC (A)	Applicable motor		Thermal Loss (W)
				kW	HP	
537 VDC to 679 VDC (Working range: 350 VDC to 800 VDC) Output voltage: 0 VAC to 480 VAC						
MD810-50M4T200GXXXH	200	420	377	200	270	3342
MD810-50M4T250GXXXH	250	515	465	250	330	5109
MD810-50M4T315GXXXH	315	650	585	315	420	6143
MD810-50M4T355GXXXH	355	725	650	355	475	7912

Table 1–4 Technical specifications of the drive unit (dual-axis)

Drive Unit Model	Rated power kW	Input current DC (A)	Output current AC (A)	Applicable motor		Thermal Loss (W)
				kW	HP	
537 VDC to 679 VDC (Working range: 350 VDC to 800 VDC) Output voltage: 0 VAC to 480 VAC						
MD810-50M4TD1.5GXXX	1.5	10	3.8	1.5	2	91
MD810-50M4TD2.2GXXX	2.2	14	5.1	2.2	3	116
MD810-50M4TD3.7GXXX	3.7	24	9	3.7	5	151
MD810-50M4TD5.5GXXX	5.5	34	13	5.5	7.5	252
MD810-50M4TD7.5GXXX(W)	7.5	44	17	7.5	10	307
MD810-50M4TD11GXXX (W)	11	62	25	11	15	483
MD810-50M4TD15GXXX (W)	15	80	32	15	20	573
MD810-50M4TD18.5GXXX(W)	18.5	92	37	18.5	25	672

Table 1–5 Technical specifications of the drive unit

Items		Specifications
Basic parameters	Power grid voltage	Three-phase 380 VAC to 480 VAC: 323 VAC to 528 VAC (-15% to 10%)
	Power range	• Drive unit (single-axis):1.5 kW to 355 kW • Drive unit (dual-axis): 1.5 kW to 18.5 kW
	Grid type	TN, TT, IT (Y)
	Input voltage	537 VDC to 679 VDC (Working range: 350 VDC to 800 VDC)
	Input frequency	0 Hz to 500 Hz
	Input frequency resolution	• Digital setting: 0.01 Hz • Analog setting: Maximum frequency x 0.025% (minimum unit)
	Carrier frequency	• V/f control: 0.8 kHz to 12 kHz • SVC and FVC: 2 kHz to 6 kHz The carrier frequency is automatically adjusted based on the heatsink temperature.
	Output frequency	• V/f control: 0 Hz to 599 Hz • SVC and FVC: 0 Hz to 599 Hz
	Braking	The braking module and braking resistor are used for braking.
	Motor type and control mode	• Three-phase asynchronous motor: V/f control, SVC, and FVC • Permanent magnet synchronous motor (PMSM): SVC and FVC
	Speed regulation range	• 1:50 (asynchronous motor in V/f control mode) • 1: 100 (asynchronous motor in SVC mode) • 1:1000 (FVC of asynchronous motor)
	Speed control accuracy	• ±1.0% (V/f) • ±0.5% (SVC) • ±0.02% (FVC)
	Speed fluctuation	• ±0.5% (SVC) • ±0.2% (FVC)
	Torque response time	• < 20 ms (SVC) • < 5 ms (FVC)
	Torque control accuracy	• ±5% (SVC, above 10 Hz) • ±3% (FVC)
	Torque control mode	SVC and FVC
	Overload capacity	• overload: 1 hour at 115% of the rated current continuously • overload: 1 minute at 150% of the rated current continuously • overload: 60 seconds at 178% of the rated current continuously
	Torque boost	Automatic torque boost; manual torque boost: 0.1 % to 30.0%
	V/f curve	Linear V/f, multi-point V/f, square V/f, complete V/f separation, and half V/f separation

Items		Specifications
Customized functions	Acceleration/ deceleration curve	Straight line, S-curve mode 1, S-curve mode 2
	Built-in PID	The system implements the Proportional-Integral-Derivative (PID) function (two groups of parameters) in the closed-loop control.
	Communication/ Bus	Different models support different communication protocols. For details, see the optional communication components in *"Figure 1–4 " on page 20* . Communication protocols are described as follows: ● Modbus-RTU: Maximum baud rate of 115200; 128 nodes; maximum communication distance of 1000 m ● PROFIBUS DP (model dependent): Baud rate of 12 Mbps; 32 nodes; maximum communication distance of 100 m ● CANopen: Baud rate of 1 Mbps; 64 nodes; maximum communication distance of 40 m ● CANlink: Baud rate of 1 Mbps; 18 nodes; maximum communication distance of 20 m ● EtherCAT: Baud rate of 100 Mbps: 65535 nodes; maximum communication distance of 100 m
	Command source	LED operating panel or external LCD operating panel, the control terminal, and communication
		Switchover between these sources can be implemented in multiple ways.
	Frequency source	8 frequency sources, including the digital setting, voltage-type analog setting, current-type analog setting, pulse setting, communication setting, PID, multi-speed, and built-in simple PLC
		The sources can be switched or superposed in various ways.
	Wobble	Multiple triangle wave frequency control functions
	Fixed-length and timing control	Running length and time setting control

Items		Specifications
HMI	Analog input	AI1: 0 V to 10 V and -10 V to +10 V available; 12-bit resolution; correction accuracy error: ±3%; input impedance: 22.1 kΩ
		AI2: 0 V to 10 V and 0 mA to 20 mA available; 12-bit resolution; correction accuracy error: ±0.3%; input impedance in voltage input mode: 22.1 kΩ; input impedance in current input mode: 500 Ω or 250 Ω.
	Analog output:	0 V to 10 V and 0 mA to 20 mA available; 12-bit resolution; correction accuracy error: ±0.5%; maximum load output current in voltage mode: 2 mA; load impedance in voltage mode: > 5 kΩ; load impedance in current mode: < 500 Ω
	Digital input/output	Single-axis: • 2 DIs, PNP or NPN input method available • 2 DI/DOs. When the DI/DO is used as the DI, the PNP or NPN input method is available. When the DI/DO is used as the DO, only the NPN input method is available. When DIO1 is used as the DI, the maximum input frequency is 100 Hz. When DIO2 is used as the DO, the maximum output frequency is 100 Hz. • 1 relay output terminals; programmable NO/NC contacts
		Dual-axis: • 1 DI per axis, PNP or NPN input method available • 1 DI/DO for each axis. When the DI/DO is used as the DI, the PNP or NPN input mode method is available, and the maximum input frequency is 100 Hz. When DI/DO is used as the DO, only the NPN input method is available. When DIO1 is used as the DI, • 1 relay output terminal; programmable NO/NC contact; shared by axis 1 and axis 2
	Operating panel display	Standard 5-digit LED display, 5 keys
Environment	Ambient temperature	Operating temperature: -10°C to 40°C, with temperature change rate lower than 0.5°C/min (Derating is required for temperatures above 40°C. For temperatures above 40°C and lower than 50°C (maximum temperature), derate 1.5% for every additional 1°C.)
		Storage temperature: –25°C to +70°C
		Transportation temperature: –25°C to +70°C
	Relative humidity	Relative humidity: 5% to 95%. Standard models are not suitable for an environment with corrosive gases. In the environment, select the model with a corrosion-resistant enclosure with a protective coating.
		Relative humidity for storage: 5% to 95%.
		Relative humidity for transportation: lower than 95% at 40 °C
	Altitude	Star power grid: maximum 3000 m • ≤ 1000 m (3281 ft.): derating not required • > 1000 m (3281 ft.): derated by 1% for every additional 100 m (328.1 ft.)
Vibration	• Application scenario: Tested according to IEC 60068-2-6 Amplitude at 5 Hz to 8.4 Hz: 3.5 mm; acceleration at 8.4 Hz to 200 Hz: 1 g; 10 cycles/axis • Transportation scenario: Tested according to IEC 60068-2-64 Power spectrum density at 5 Hz to 100 Hz: 0.01 g^2/Hz; power spectrum density at 200 Hz: 0.001 g^2/Hz; Grms: 1.14 g	
Shock	Usage/transportation scenario: Tested according to IEC 60068-2-27 Acceleration: 15 g; pulse width; 11 ms; 18 times in total in each of X, Y, Z axes	

Items	Specifications
Protection function	Protection for short circuit to ground upon power-on, phase-to-phase short circuit, motor overheating (PT100, PT1000), AC drive overcurrent, AC drive overload (output power limit), motor overload, AC drive overvoltage, AC drive undervoltage, AC drive SVC stall, AC drive overheating, output phase loss, communication fault, current detection fault, motor auto-tuning fault, encoder fault detection, EEPROM read and write fault, locked-rotor, excessive speed deviation, and stall alarm.
Overvoltage class	OVC III
Pollution degree	PD2
IP rating	IP00
Protection class	Class I
Cooling mode	Air cooling or water cooling Different models support different cooling modes. For details, see *"Figure 1–4 " on page 20* .

1.4 Component Description

1.4.1 Components of the Power Supply Unit

The following figure shows the components of the power supply unit. Different power supply units have different control circuit terminals. For details, see *"3.5.1.2 Arrangement of Control Terminals for the Power Supply Unit" on page 84*.

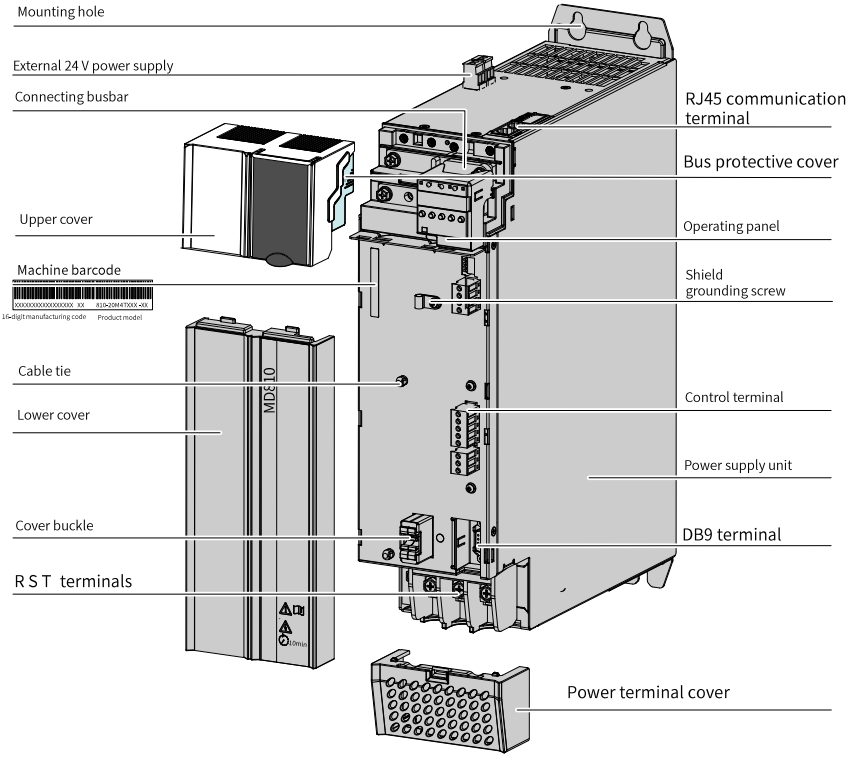

Figure 1-5 Components of the power supply unit

1.4.2 Components of the Drive Unit

The following figure shows the components of the drive unit (single-axis). Different drive units (single-axis) have different control circuit terminals. For details, see *"3.5.2.2 Control Terminal Arrangement of the Drive Unit (Single-Axis)" on page 93*.

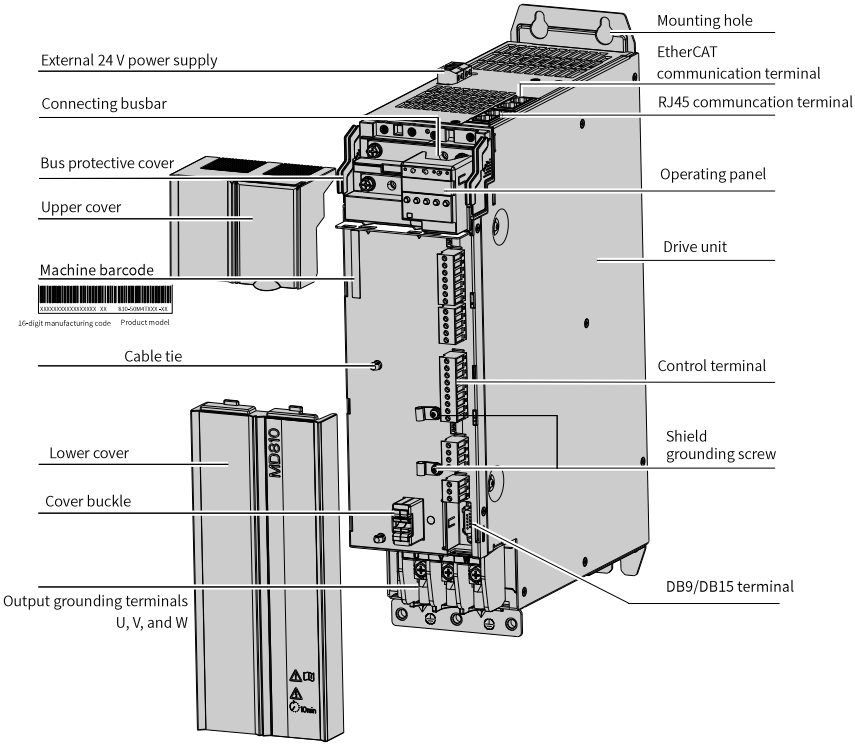

Figure 1-6 Components of the drive unit (single-axis)

The following figure shows the components of the drive unit (dual-axis). Different drive units (dual-axis) have different control circuit terminals. For details, see *"3.5.3.2 Control Terminal Arrangement of the Drive Unit (Dual-Axis)" on page 108*.

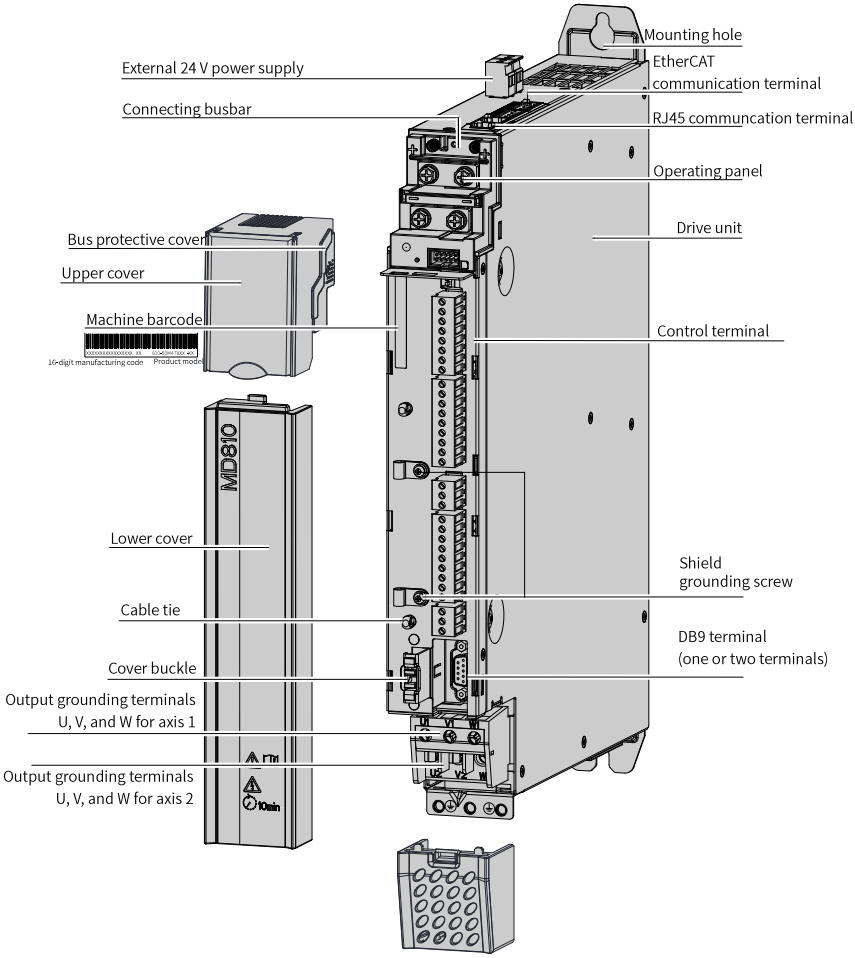

Figure 1-7 Components of the drive unit (dual-axis)

1.5 System Components

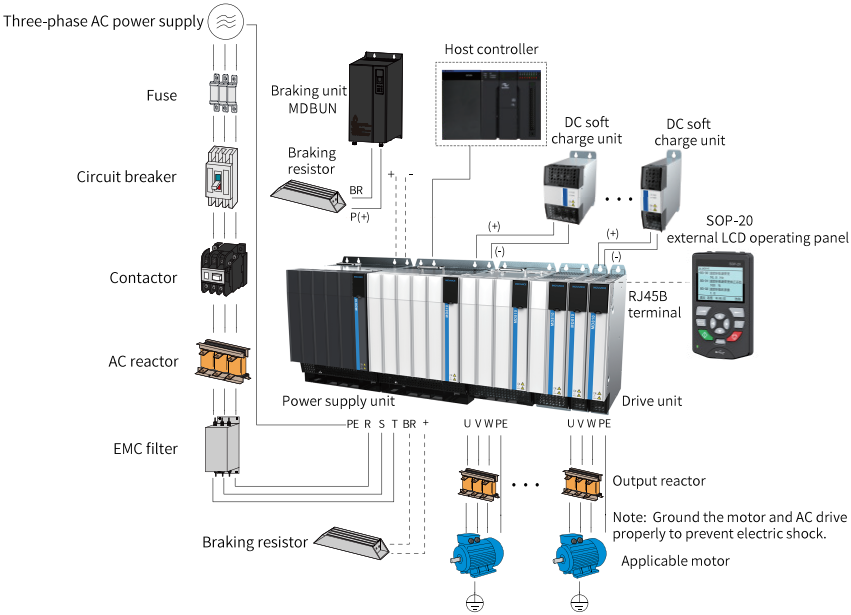

Figure 1-8 System components

Table 1–6 Function description of peripheral components for the MD810 series

Name	Installation Position	Function Description
Breaker	Between the power supply and the input side of the power supply unit	Short circuit breaker: Cuts off power supply when overcurrent occurs on downstream devices, preventing accidents.
Fuse	Between the power supply and the AC drive input side	Provides protection against short circuit and protects downstream semiconductor components.
Contactor	Between the circuit breaker and the input side of the power supply unit	It is used to connect to or cut off the power supply of the AC drive. Do not power on and power off the AC drive frequently by switching the contactor on and off (at least 1-hour interval) or use it to directly start the AC drive.

Name	Installation Position	Function Description
Input reactor	Input side of the power supply unit	Improves the power factor of the input side. Eliminates harmonics on the input side and prevent other devices from being damaged due to voltage waveform distortion. Eliminates input current unbalance caused by inter-phase unbalance. It is recommended to install the input reactor in case of power grid suffering from pollution and harmonics.
EMC filter	Input side of the power supply unit	It reduces the conduction and radiation interference generated by the AC drive to external devices. Reduces conduction interference flowing from the power supply to the AC drive and improves the anti-interference capacity of the AC drive.
Braking resistor	22 kW/45 kW power supply unit	For the 22/45 kW power supply unit, use a braking resistor. The braking resistor consumes regenerative energy generated during motor deceleration.
Braking unit	Power supply unit with the power rating of 110 kW or above	For the power supply unit with the power rating of 110 kW or above, use the braking unit (MDBUN) of Inovance and the recommended braking resistor. The braking unit or braking resistor consumes regenerative energy during motor deceleration..
Output reactor	Between the output side of the drive unit and the motor; close to the AC drive	Generally, the AC drive generates much high-order harmonics on the output side. When a motor is far away from the AC drive, much distributed capacitance exists in the circuit. Certain harmonics may cause resonance in the circuit, which brings the following adverse effects: • Degrades the motor insulation performance and damages the motor in the long run. • Generates large leakage current and causes frequent AC drive protection trips. When the distance between the AC drive and the motor exceeds 100 m, installing an AC output reactor is recommended.
Output magnetic ring	Output side in the drive unit	Reduces the external interference generated by the AC drive.
Applicable motor	AC drive output side	Select a proper motor according to recommendations.
DC soft charge unit	Between the power supply unit and the drive unit	With the DC soft charge unit, you can replace the drive unit without powering off the power supply unit (bus voltage keeps normal). For details, see *"3.1 Electrical Wiring Diagram" on page 62*.

Name	Installation Position	Function Description
DC circuit breaker	Between the DC soft charge unit and the power supply unit	If the DC soft charge unit is installed, install a DC circuit breaker in front of the DC soft charge unit.
SOP-20 external LCD operating panel	Inserting the network cable of the SOP-20 into the RJ45B port.	Used to facilitate commissioning and parameter setting.

Note

- Do not install the capacitor or surge protection device (SPD) on the output side of the AC drive. Otherwise, the AC drive may be faulty, or the capacitor and SPD may be damaged.
- The input/output (main circuit) of the drive can generate harmonics, which may disturb the communication devices around the AC drive. Therefore, install an anti-interference filter to minimize the interference.

1.6 List of Options

Option Name		Option Model	Code	Applicable Model
Co-bus external power terminal	200 A co-bus external power terminal	MD810-CON1	01040014	Power supply unit: 22 kW Drive unit: • 1.5-7.5 kW (single-axis) • 1.5-5.5 kW (dual-axis)
	400 A co-bus external power terminal	MD810-CON2	01040015	Power supply unit: 45 kW, 110 kW, and 160 kW Drive unit: • 11-160 kW (single-axis) • 7.5-18.5 kW (dual-axis)
Through-hole mounting bracket	Through-hole mounting bracket with the width of 50 mm	MD810-AZJ50M-W1	01040039	Power supply unit: 22 kW Drive unit: • 1.5-7.5 kW (single-axis) • 1.5-5.5 kW (dual-axis)
	Through-hole mounting bracket with the width of 100 mm	MD810-AZJ50M-W2	01040040	Power supply unit: 45 kW Drive unit: • 11-37 kW (single-axis) • 7.5-18.5 kW (dual-axis)
	Through-hole mounting bracket with the width of 200 mm	MD810-AZJ20M-W3	01040042	Power supply unit: 110 kW
		MD810-AZJ50M-W3	01040041	Drive unit: 45-75 kW (single-axis)
	Through-hole mounting bracket with the width of 300 mm	MD810-AZJ20M-W4	01040043	Power supply unit: 160 kW Drive unit: 90-160 kW (single-axis)
Air guide plate	Air guide plate with the width of 50 mm	MD810-DLB-W1	01040044	Power supply unit: 22 kW Drive unit: • 1.5-7.5 kW (single-axis) • 1.5-5.5 kW (dual-axis)
	Air guide plate with the width of 100 mm	MD810-DLB-W2	01040045	Power supply unit: 45 kW Drive unit: • 11-37 kW (single-axis) • 7.5-18.5 kW (dual-axis)
	Air guide plate with the width of 200 mm	MD810-DLB-W3	01040046	Power supply unit: 110 kW Drive unit: 45-75 kW (single-axis)
	Air guide plate with the width of 300 mm	MD810-DLB-W4	01040047	Power supply unit: 160 kW Drive unit: 90-160 kW (single-axis)

Option Name		Option Model	Code	Applicable Model
Grounding bracket of cable shield (Including the hose clamp)	Shield bracket with the width of 50 mm	MD810-PBJ50M-W1	01040048	Power supply unit: 22 kW Drive unit: • 1.5-7.5 kW (single-axis) • 1.5-5.5 kW (dual-axis)
	Shield bracket with the width of 100 mm	MD810-PBJ20M-W2	01040204	Power supply unit: 45 kW
		MD810-PBJ50M-W2	01040049	Drive unit: • 11-37 kW (single-axis) • 7.5-18.5 kW (dual-axis)
	Shield bracket with the width of 200 mm	MD810-PBJ50M-W3	01040050	Power supply unit: 110 kW Drive unit: 45-75 kW (single-axis)
	Shield bracket with the width of 300 mm	MD810-PBJ50M-W4	01040105	Drive unit: 90-160 kW (single-axis)
External LCD Operating Panel	SOP-20 external LCD operating panel	SOP-20-MD	01040028	All series products
Network cable for the external operating panel	3 m network cable	C45590-GNCN-C25003	01040020	All series products
DC soft charge unit		INOV-SU-30 (width of 50 mm)	01040024	Drive unit: • 1.5-7.5 kW (single-axis) • 1.5-5.5 kW (dual-axis)
		INOV-SU-60 (width of 100 mm)	01040056	Drive unit: • 11-22 kW (single-axis) • 7.5-11 kW (dual-axis)
		INOV-SU-100 (width of 100 mm)	01040025	Drive unit: • 30-37 kW (single-axis) • 15-18.5 kW (dual-axis)
		INOV-SU-170 (width of 200 mm)	01040026	Drive unit (single-axis): 45 kW to 75 kW
Braking components		MDBUN-90-T	01013126	MD810-20M4T110GXXX
		MDBUN-90-5T	0101AR58	
		MDBUN-200-T	01040104	MD810-20M4T160GXXX(W) MD810-20M4T355GXXX
		MDBUN-200-5T	01040160	

Option Name		Option Model	Code	Applicable Model
Peripheral electrical components	Fuse, contactor, and circuit breaker	/	/	For details, see *"4.9.2 Fuse, Contactor, and Circuit Breaker" on page 177*
	Bus fuse	/	/	For details, see *"4.9.4 Bus fuse" on page 184*
	DC circuit breaker	/	/	For details, see *"4.9.5 DC Circuit Breaker" on page 185*
	AC input reactor	MD-ACL-60-0.24-4T-2%	11024097	MD810-20M4T22GXXX
		MD-ACL-120-0.12-4T-2%	11024044	MD810-20M4T45GXXX
		MD-ACL-250-0.056-4T-2%	11024046	MD810-20M4T110GXXX
		MD-ACL-330-0.042-4T-2%	11024041	MD810-20M4T160GXXX(W)
		MD-ACL-800-0.017-4T-2%	11024095	MD810-20M4T355GXXX
	AC output reactor	/	/	For details, see *"4.9.7 AC Output Reactor" on page 189*
	EMC filter	/	/	For details, see *"4.9.8 EMC Filter" on page 198*
	Simple filter	/	/	For details, see *"4.9.9 Simple Filter" on page 203*
	Magnetic ring	DY644020H	11013031	For details, see *"4.9.10 Magnetic Ring and Ferrite Clamp" on page 204*
		DY805020H	11013032	
		DY1207030H	11013033	
	Magnetic claw	DYR-130-B	11013046	For details, see *"4.9.10 Magnetic Ring and Ferrite Clamp" on page 204*
	PROFIBUS DP Bus Adapter	/	/	For details, see *"4.8 PROFIBUS DP Bus Adapter" on page 174*
Network cable	240 mm network cable	C45590-GNCN-C2500024	01040038	Applicable to the model with the width of 50 mm
	250 mm network cable	C45590-GNCN-C2500025	01040018	Applicable to the model with the width of 100 mm
	350 mm network cable	C45590-GNCN-C2500035	01040019	Applicable to the model with the width of 200 mm
	430 mm network cable	C45590-GNCN-C2500043	01040021	Applicable to the model with the width of 300 mm
	800 mm network cable	C45590-GNCN-C2500080	01040016	Applicable to the model with the width of 180 mm

1.7 Model Selection

1.7.1 System selection flow

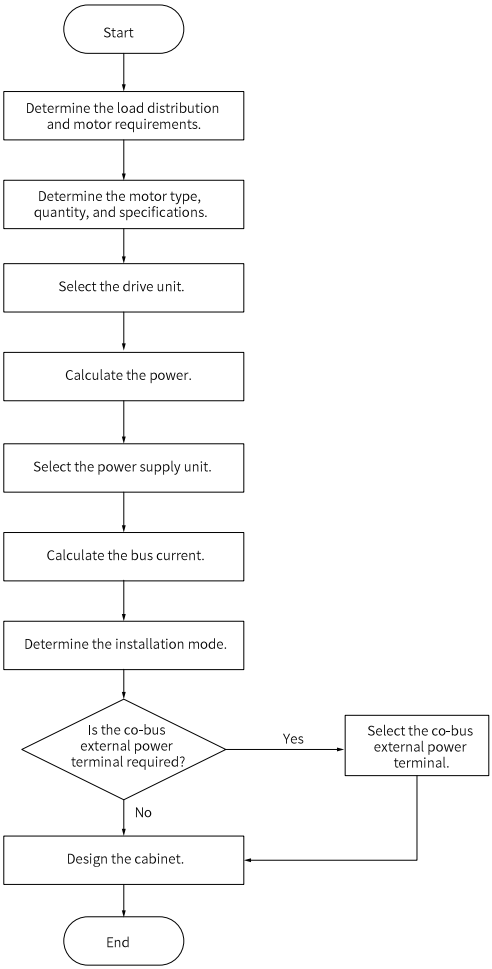

Figure 1-9 System selection flow

1.7.2 Load and Motor Selection

1. Determine the motor type and quantity according to the load and operating mode of the mechanical equipment.
2. Determine the requirements of the mechanical equipment for the power, torque, speed, startup, speed regulation, braking, overload, heating, and temperature rise of the motor.

3. Select the rated power, rated voltage, and rated speed of the motor in the motor product catalog.
4. Select the motor capacity on the premise that the motor can meet the requirements of the mechanical equipment load.

$$P_n = \sqrt{3} \times U_n \times I_n \times \cos\theta \times \eta$$

Where:

- P_n: Rated power
- U_n: Rated voltage
- I_N: Rated current
- Cosθ: Power factor
- η: Efficiency

1.7.3 Drive Unit Selection

1. Refer to *"1.3.2 Technical specifications of the drive unit" on page 24*, and then select the power and model of the drive unit according to the rated power of the motor.
2. Determine the drive unit quantity according to the motor quantity. The single-axis drive unit can drive one motor, and the dual-axis drive unit can drive two motors.

1.7.4 Power Supply Unit Selection

1. Calculate the sum of the rated power of all selected drive units.
2. The power of the power supply unit must be greater than or equal to 80% of the sum of the rated power of all drive units.

$$P \geqslant 80\% \ (P1 + P2 + P3 + P4 + P5 + ...)$$

where P is the power of the power supply unit and P1, P2, P3, P4, P5, etc. are the rated power of drive units.

3. Select a power supply unit model based on *"1.3.1 Technical specifications" on page 22*. When one power supply unit cannot meet the power requirements, multiple power supply units in parallel connection can be used.

Note

- In general, the configuration coefficient of the power supply unit and the drive unit is 80%. When the requirement for the equipment overload capacity is high, the configuration coefficient needs to be adjusted to 100% to 150%; when the requirement for the equipment overload capacity is low, the configuration coefficient can be adjusted to 60% to 80%.
- Only power supply units with the same power rating can be paralleled. The maximum number of paralleled power supply units cannot exceed four.
- For details on braking unit selection, see *"4.7 Braking Components" on page 170*.

1.7.5 System Combination and Arrangement

The MD810 series supports single-rack or dual-rack installation, and the power supply unit can be installed in the middle or on the left side.

Single rack installation

If the cabinet has enough space, it is recommended to install units on a single rack, with the power supply unit placed on the left or in the middle. The following table describes the typical arrangement modes of single-rack installation.

Arrangement Mode	Example	Bus Current Calculation
Power supply unit placed on the left	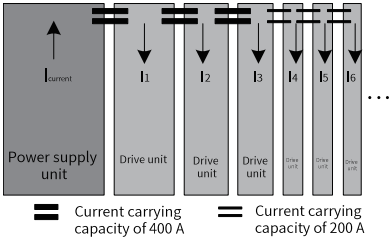	$I_{\text{power supply unit}} \geqslant 80\% \times (I_1 + I_2 + I_3 + I_4 + I_5 + I_6 + ...)$ $I_1 + I_2 + I_3 + I_4 + I_5 + I_6 + ... \leqslant 400$ A $I_4 + I_5 + I_6 + ... \leqslant 200$ A
Power supply unit placed on the left (co-bus external power terminal used)	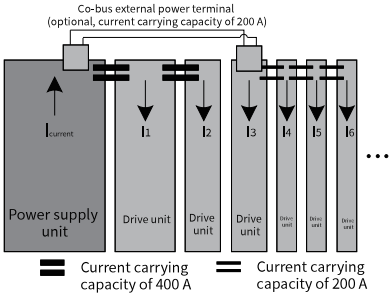	$I_{\text{power supply unit}} \geqslant 80\% \times (I_1 + I_2 + I_3 + I_4 + I_5 + I_6 + ...)$ $I_1 + I_2 \leqslant 400$ A $I_3 + I_4 + I_5 + I_6 + ... \leqslant 200$ A $I_4 + I_5 + I_6 + ... \leqslant 200$ A
Power supply unit placed in the middle	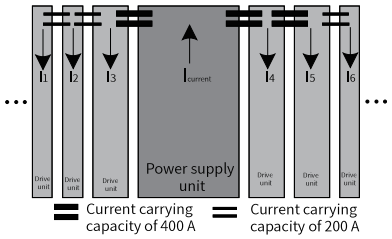	$I_{\text{power supply unit}} \geqslant 80\% \times (I_1 + I_2 + I_3 + I_4 + I_5 + I_6 + ...)$ $I_1 + I_2 + I_3 + ... \leqslant 400$ A $I_4 + I_5 + I_6 + ... \leqslant 400$ A $I_1 + I_2 + ... \leqslant 200$ A $I_6 + ... \leqslant 200$ A

Dual rack installation

If space in the cabinet is limited, dual-rack installation can be performed. In the dual-rack installation mode, the power supply unit is generally placed on the left. If there are two power supply units, install one power supply unit on each rack. If there are more than two power supply units, it is recommended to install them in different cabinets. The co-bus external power terminal is used.

The following table describes the typical arrangement modes of dual-rack installation.

Arrangement Mode	Example	Bus Current Calculation
One power supply unit (placed on the left)	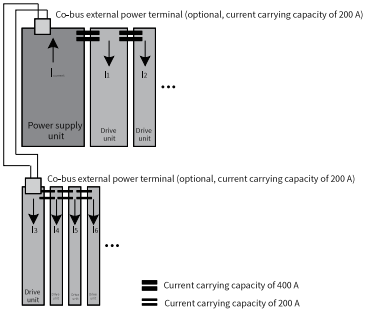	I power supply unit ⩾ 80% x (I 1 + I 2 + I 3 + I 4 + I 5 + I 6 + ...) I 1 + I 2 + ... ⩽ 400 A I 3 + I 4 + I 5 + I 6 + ... ⩽ 200 A I 4 + I 5 + I 6 + ... ⩽ 200 A
One power supply unit (placed in the middle)	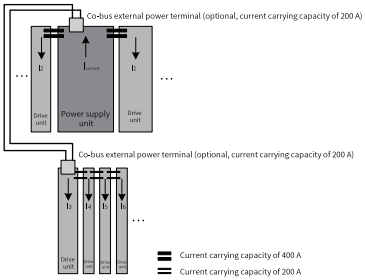	I power supply unit ⩾80% (I 1 +...+I 2 +... I 3 +I 4 +I 5 +I 6 +...) I 1 + ... ⩽ 400 A I 2 + ... ⩽ 400 A I 3 + I 4 + I 5 + I 6 + ... ⩽ 200 A I 4 + I 5 + I 6 + ... ⩽ 200 A
Two power supply units (placed on the left)	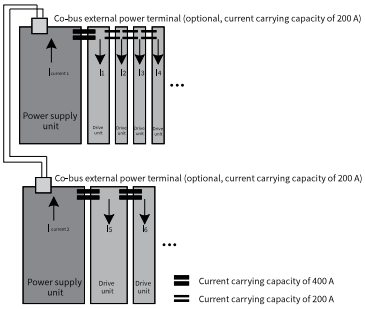	I power supply unit 1 +I power supply unit 2 ⩾80%(I 1 +I 2 +I 3 +I 4 +I 5 +I 6 +...) I 1 + I 2 + I 3 + I 4 + ... ⩽ 400 A I 2 + I 3 + I 4 + ... ⩽ 200 A I 5 + I 6 + ... ⩽ 400 A I 6 + ... ⩽ 400 A I power supply unit 1 /I power supply unit 2 ≈(I 1 +I 2 +I 3 +I 4 +...)/(I 5 +I 6 +...)
Two power supply units (placed in the middle)	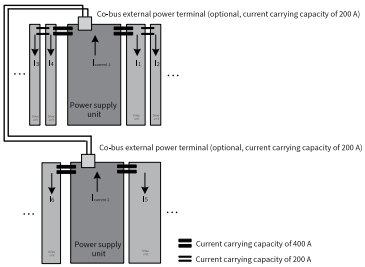	I power supply unit 1 + I power supply unit 2 ⩾80%(I 1 +I 2 +...+I 3 +I 4 +...+I 5 +...+I 6 +...) I 1 + I 2 + ... ⩽ 400 A I 2 + ... ⩽ 200 A I 3 + I 4 + ... ⩽ 400 A I 3 + ... ⩽ 200 A I 5 + ... ⩽ 400 A I 6 + ... ⩽ 400 A I power supply unit 1 /I power supply unit 2 ≈ (I 1 + I 2 + ... + I 3 + I 4 + ...)/(I 5 + ... + I 6 + ...)

2 Mechanical Design

2.1 Layout and Dimension

2.1.1 Layout and Dimension of the Power Supply Unit

The power supply unit can be classified into the booksize unit with equal width and height and the vertical tower unit. The booksize drive unit has the width of 50 mm, 100 mm, 200 mm, and 300 mm, and the vertical tower drive unit has the width of 180 mm. Except for the 355 kW power supply units, which are vertical tower units, the power supply units of other power ratings are all booksize units.

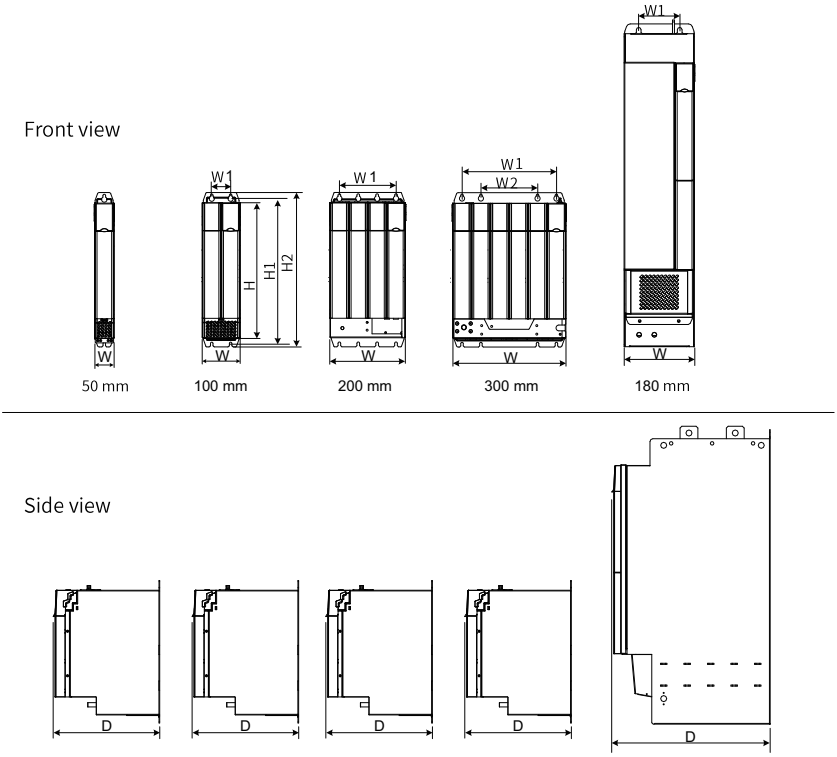

Figure 2-1 Layout and dimension of the air-cooling power supply unit

Air-Cooling Power Supply Unit Model	Outline Dimensions (mm)				Mounting Hole Dimensions (mm)			Mounting Hole Diameter (mm)	Weight (kg)
	W	D	H	H2	W1	W2	H1		
MD810-20M4T22GXXX	50	305	350	400	/	/	384	Φ7	3.8
MD810-20M4T45GXXX	100	305	350	400	50	/	384	Φ7	8
MD810-20M4T110GXXX	200	305	350	400	150	/	384	Φ7	23
MD810-20M4T160GXXX	300	305	350	400	250	150	384	Φ7	38
MD810-20M4T355GXXX	180	445	800	832	105	/	795	Φ12	65

Front view Side view

Figure 2-2 Layout and Dimension of the Water-Cooling Power Supply Unit

Water-Cooling Power Supply Unit Model	Outline Dimensions (mm)				Mounting Hole Dimensions (mm)			Mounting hole diameter (mm)	Weight (kg)
	W	D	H	H2	W1	W2	H1		
MD810-20M4T160GXXXW	300	305	350	426.5	250	150	384	Φ7	38

2.1.2 Layout and Dimension of the Drive Unit (Single-Axis)

The drive unit (single-axis) can be classified into the booksize unit with equal width and height and the vertical tower unit. The booksize drive unit has the width of 50 mm, 100 mm, 200 mm, and 300 mm, and the vertical tower drive unit has the width of 230 mm. Except for the 200 kW to 355 kW drive units, which are vertical tower units, the drive units of other power ratings are all booksize units.

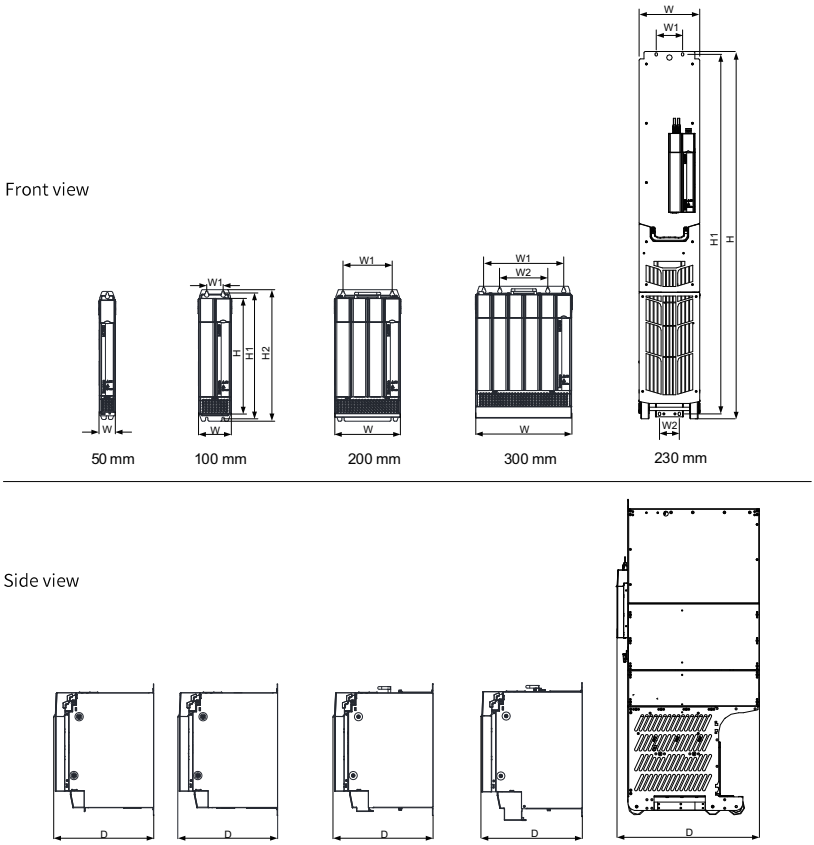

Figure 2-3 Layout and dimension of the air-cooling drive unit (single-axis)

Table 2–1 Layout and dimension of the air-cooling drive unit (single-axis)

AC Drive Model	Physical Dimensions (mm)				Hole Dimensions (mm)			Mounting Hole Diameter (mm)	Weight (kg)
	W	D	H	H2	W1	W2	H1		
MD810-50M4T1.5GXXX	50	305	350	400	/	/	384	Φ7	3.8
MD810-50M4T2.2GXXX	50	305	350	400	/	/	384	Φ7	3.8
MD810-50M4T3.7GXXX	50	305	350	400	/	/	384	Φ7	3.8
MD810-50M4T5.5GXXX	50	305	350	400	/	/	384	Φ7	3.8
MD810-50M4T7.5GXXX	50	305	350	400	/	/	384	Φ7	4

AC Drive Model	Physical Dimensions (mm)				Hole Dimensions (mm)			Mounting Hole Diameter (mm)	Weight (kg)
	W	D	H	H2	W1	W2	H1		
MD810-50M4T45GXXX	200	305	350	400	150	/	384	Φ7	18.4
MD810-50M4T55GXXX	200	305	350	400	150	/	384	Φ7	18.4
MD810-50M4T75GXXX	200	305	350	400	150	/	384	Φ7	19.5
MD810-50M4T90GXXX	300	305	350	400	250	150	384	Φ7	24.2
MD810-50M4T110GXXX	300	305	350	400	250	150	384	Φ7	24.2
MD810-50M4T132GXXX	300	305	350	400	250	150	384	Φ7	25.2
MD810-50M4T160GXXX	300	305	350	400	250	150	384	Φ7	25.2
MD810-50M4T200GXXXH	230	633	1395	/	100	75	1365	Φ9	≤130
MD810-50M4T250GXXXH	230	633	1395	/	100	75	1365	Φ9	≤130
MD810-50M4T315GXXXH	230	633	1395	/	100	75	1365	Φ9	≤130
MD810-50M4T355GXXXH	230	633	1395	/	100	75	1365	Φ9	≤130

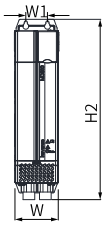

Front view

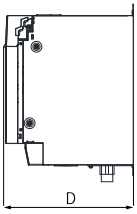

Side view

Figure 2-4 Layout and dimension of the water-cooling drive unit (single-axis)

Table 2–2 Layout and dimension of the water-cooling drive unit (single-axis)

AC Drive Model	Physical Dimensions (mm)				Hole Dimensions (mm)			Mounting Hole Diameter (mm)	Weight (kg)
	W	D	H	H2	W1	W2	H1		
MD810-50M4T11GXXX (W)	100	305	350	400	50	/	384	Φ7	7.5
MD810-50M4T15GXXX (W)	100	305	350	400	50	/	384	Φ7	7.5
MD810-50M4T18.5GXXX(W)	100	305	350	400	50	/	384	Φ7	8
MD810-50M4T22GXXX(W)	100	305	350	400	50	/	384	Φ7	8.5
MD810-50M4T30GXXX (W)	100	305	350	400	50	/	384	Φ7	9.4
MD810-50M4T37GXXX (W)	100	305	350	400	50	/	384	Φ7	9.4

2.1.3 Layout and Dimension of the Drive Unit (Dual-Axis)

The drive unit (dual-axis) is the booksize unit with equal width and height. It is classified into two structures with the width of 50 mm and 100 mm.

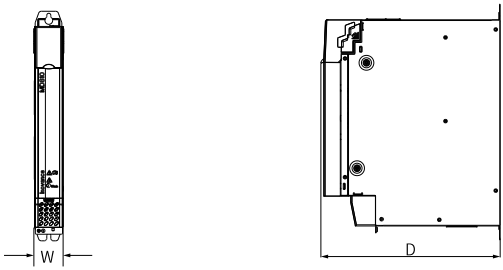

Front view Side view

Figure 2-5 Layout and dimension of the air-cooling drive unit (dual-axis)

Table 2–3 Layout and dimension of the air-cooling drive unit (dual-axis)

AC Drive Model	Physical Dimensions (mm)				Hole Dimensions (mm)			Mounting Hole Diameter (mm)	Weight (kg)
	W	D	H	H2	W1	W2	H1		
MD810-50M4TD1.5GXXX	50	305	350	400	/	/	384	Φ7	4.5
MD810-50M4TD2.2GXXX	50	305	350	400	/	/	384	Φ7	4.5

AC Drive Model	Physical Dimensions (mm)				Hole Dimensions (mm)			Mounting Hole Diameter (mm)	Weight (kg)
	W	D	H	H2	W1	W2	H1		
MD810-50M4TD3.7GXXX	50	305	350	400	/	/	384	Φ7	4.5
MD810-50M4TD5.5GXXX	50	305	350	400	/	/	384	Φ7	4.5

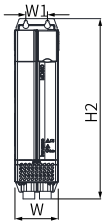

Front view

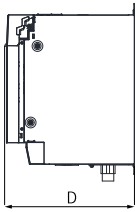

Side view

Figure 2-6 Layout and dimension of the water-cooling drive unit (dual-axis)

Table 2–4 Layout and dimension of the water-cooling drive unit (dual-axis)

AC Drive Model	Physical Dimensions (mm)				Hole Dimensions (mm)			Mounting Hole Diameter (mm)	Weight (kg)
	W	D	H	H2	W1	W2	H1		
MD810-50M4TD7.5GXXX(W)	100	305	350	400	50	/	384	Φ7	6.5
MD810-50M4TD11GXXX(W)	100	305	350	400	50	/	384	Φ7	9.5
MD810-50M4TD15GXXX(W)	100	305	350	400	50	/	384	Φ7	9.5
MD810-50M4TD18.5GXXX(W)	100	305	350	400	50	/	384	Φ7	9.5

2.2 Cabinet Design

2.2.1 Clearance Requirements

The power supply unit and drive unit of the MD810 series are classified into booksize and vertical tower structures. The booksize unit features the width of 50 mm, 100 mm, 200 mm, and 300 mm, and the vertical tower unit features the width of 180 mm (power supply unit only) and 230 mm (drive unit only).

The recommended installation methods include single-rack installation and dual-rack installation. For dual-rack installation, install the air guide plate for the units on the lower rack. The following table describes the minimum clearance between two racks.

Table 2–5 Minimum clearance during the installation of the unit

Items	Booksize unit				Vertical Tower Unit	
	Unit with Width of 50 mm	Unit with Width of 100 mm	Unit with Width of 200 mm	Unit with Width of 300 mm	Unit with Width of 180 mm (Power Supply Unit Only)	Unit with Width of 230 mm (Drive Unit Only)
S1	⩾ 300 mm	⩾ 300 mm	⩾ 300 mm	⩾ 300 mm	⩾ 300 mm	⩾ 300 mm
S2	⩾ 300 mm	⩾ 300 mm	⩾ 300 mm	⩾ 300 mm	⩾ 500 mm	⩾ 500 mm
S3	⩾ 300 mm	⩾ 300 mm	⩾ 300 mm	⩾ 300 mm	/	/

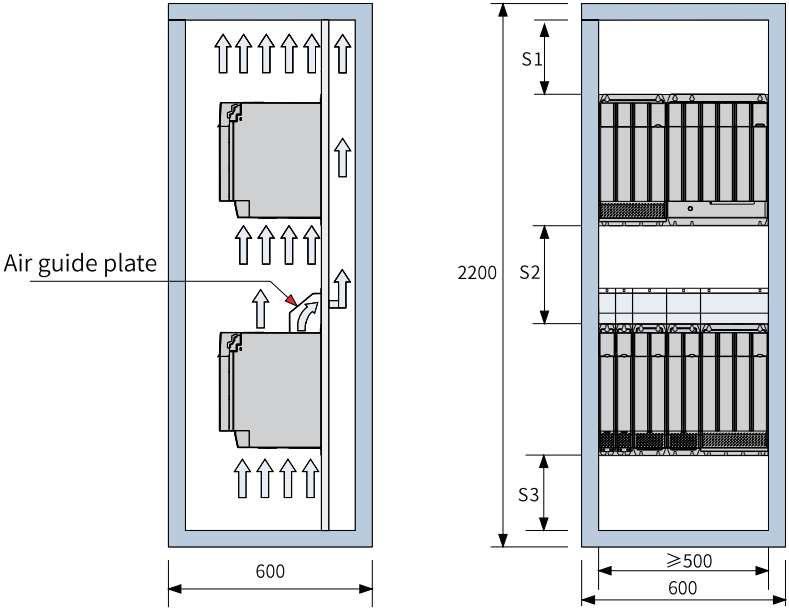

Figure 2-7 Clearance for booksize units in dual-rack installation (in mm)

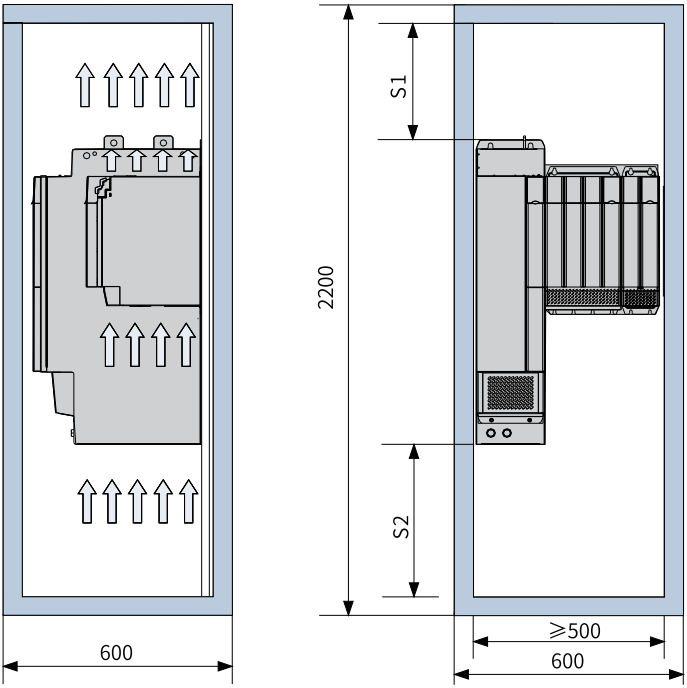

Figure 2-8 Clearances for installing the vertical tower unit (in mm)

Note

It is recommend that the power supply unit and drive unit be installed vertically.

2.2.2 Mounting Backplate Design Requirements

Thickness and stiffness reinforcement principles

To avoid damage to the unit during transportation and ensure its normal operation, the mounting backplate of the unit must feature excellent stiffness and strength performance and a thickness of not less than 2 mm. Reinforcement must be performed at the top and bottom mounting feet. The recommended reinforcement scheme is as follows:

- Scheme 1: Reinforcing the lateral bending of the backplate

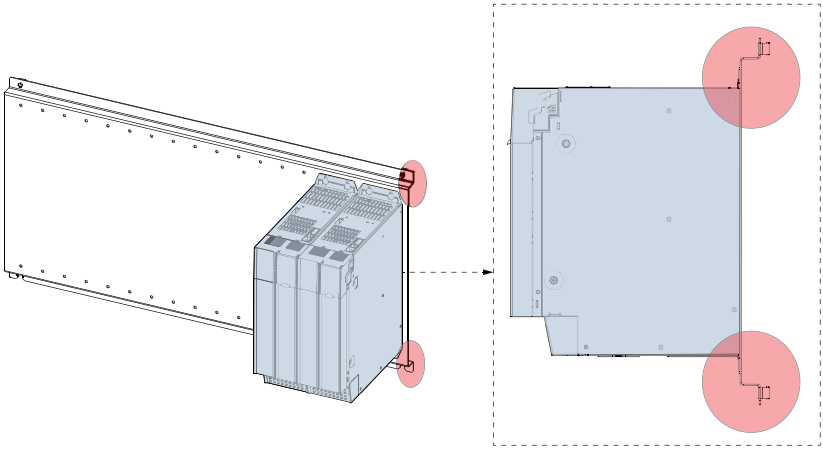

Detailed side view

- Scheme 2: Welding a lateral reinforced beam on the back of the backplate

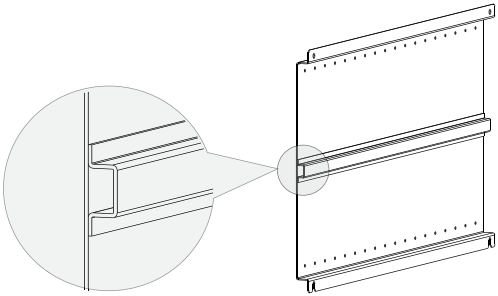

Mounting hole principles

- The booksize unit is characterized by equal height and equal spacing of mounting holes of 50 mm. Drill mounting holes on the backplate in advance for convenient installation.
- To avoid damage to the unit during transportation, tap the screw on the installation backplate, and then use self-clinching nuts or independent nuts on the back of the backplate to enhance screw-thread fitting and fastening effect.

Note

To ensure reliable connection of the built-in DC busbar of the unit, the relative position of the unit mounting holes must be accurate. Therefore, it is recommended that the mounting holes be drilled when the backplane is processed.

Mounting hole dimensions

- Dimensions of mounting holes for the booksize units

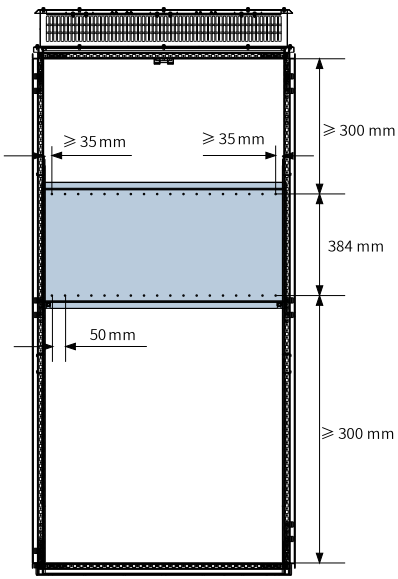

Single rack installation

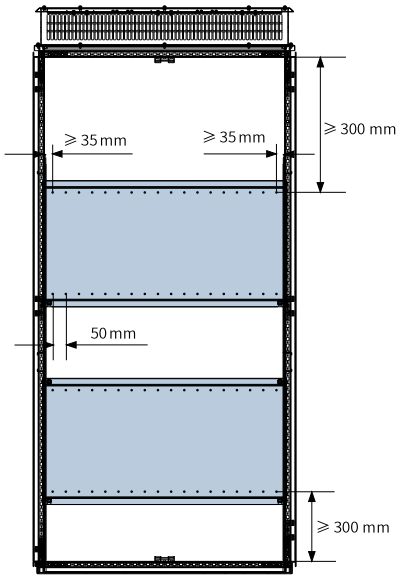

Dual rack installation

- Dimensions of mounting holes for the vertical tower units

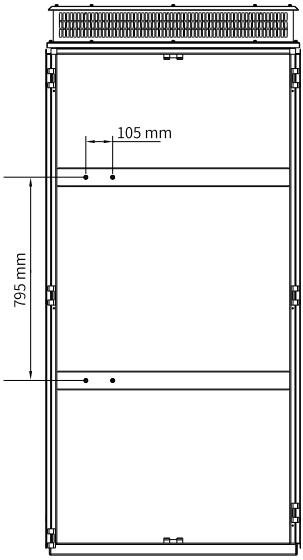

2.2.3 Cabinet Cooling Design

The air flows from bottom to top after being heated. Therefore, the cabinet air inlet must be at least 50 mm lower than the air inlet of the drive unit, as shown below. Scenarios of recommended cabinet air duct layout are as follows:

1. The air inlet is on the front door at the bottom of the cabinet and the air output is at the top of the cabinet.

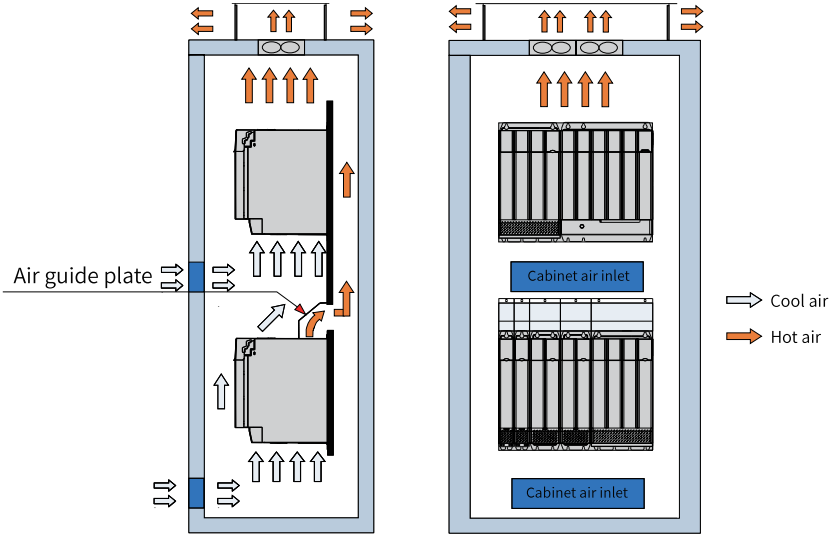

2. The air inlet is on the front door at the bottom of the cabinet and the air output is at the upper side of the cabinet.

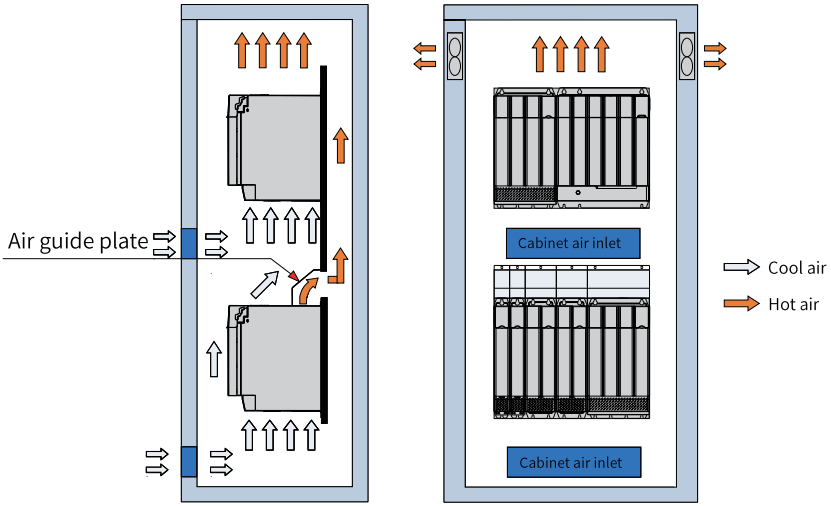

The air duct layout of the cabinet can be adjusted properly if the installation dimensions in *"2.2.1 Clearance Requirements" on page 49* are met.

Air Inlet Design

The power supply unit and drive unit are forcedly air cooled with a built-in fan. To ensure that enough cooling air enters the cabinet, the air inlet on the cabinet door must be large enough. The following table describes the minimum ventilation area of the cabinet air inlet in the cabinet.

Table 2–6 Minimum effective ventilation area of the cabinet air inlet for the power supply unit

Power Supply Unit Model	Minimum Effective Ventilation Area of the Cabinet Air Inlet (cm^2)
MD810-20M4T22GXXX	15
MD810-20M4T45GXXX	50
MD810-20M4T110GXXX	90
MD810-20M4T160GXXX(W)	150
MD810-20M4T355GXXX	150

Table 2–7 Minimum effective ventilation area of the cabinet air inlet for the drive unit

Drive Unit Model	Minimum Effective Ventilation Area of the Cabinet Air Inlet (cm^2)
MD810-50M4T1.5GXXX	15
MD810-50M4T2.2GXXX	15
MD810-50M4T3.7GXXX	15
MD810-50M4T5.5GXXX	15
MD810-50M4T7.5GXXX	15
MD810-50M4T11GXXX (W)	45
MD810-50M4T15GXXX (W)	45
MD810-50M4T18.5GXXX(W)	45
MD810-50M4T22GXXX(W)	70
MD810-50M4T30GXXX (W)	70
MD810-50M4T37GXXX (W)	70
MD810-50M4T45GXXX	90
MD810-50M4T55GXXX	90
MD810-50M4T75GXXX	90
MD810-50M4T90GXXX	147
MD810-50M4T110GXXX	147
MD810-50M4T132GXXX	147
MD810-50M4T160GXXX	147
MD810-50M4T200GXXXH	1400
MD810-50M4T250GXXXH	1400

Drive Unit Model	Minimum Effective Ventilation Area of the Cabinet Air Inlet (cm^2)
MD810-50M4T315GXXXH	1400
MD810-50M4T355GXXXH	1400
MD810-50M4TD1.5GXXX	15
MD810-50M4TD2.2GXXX	15
MD810-50M4TD3.7GXXX	15
MD810-50M4TD5.5GXXX	45
MD810-50M4TD7.5GXXX(W)	45
MD810-50M4TD11GXXX (W)	70
MD810-50M4TD15GXXX (W)	70
MD810-50M4TD18.5GXXX(W)	70

Note

The air volume of the selected fan cannot be smaller than the maximum air volume Qmax. If a single fan cannot meet this requirement. multiple fans can be used.

Air Outlet Design

To ensure sufficient heat dissipation of the power supply unit and the drive unit, hot air in the cabinet must be exhausted to the outside. The passive or active air ventilation mode can be adopted.

- Passive air ventilation (self-ventilated)
  Passive air discharge is to guide exhaust air from the power supply unit and drive unit to be discharge to outside the cabinet from the air outlet at the top of the cabinet.

  Passive air exhaust can easily cause hot air to accumulate on the upper part of the cabinet, causing the air pressure in this area to rise. The air pressure at the cabinet air inlet is low due to the suction effect of the fan of the power supply unit and the drive unit at the air inlet. Therefore, there is an air pressure difference between the air outlet and air inlet of the cabinet to form an air flow in the cabinet. This air flow forces hot air at the air outlet to flow towards the air inlet so that it is absorbed into the AC drive again, causing a great temperature rise and an adverse effect on the performance of the power supply unit and the drive unit.

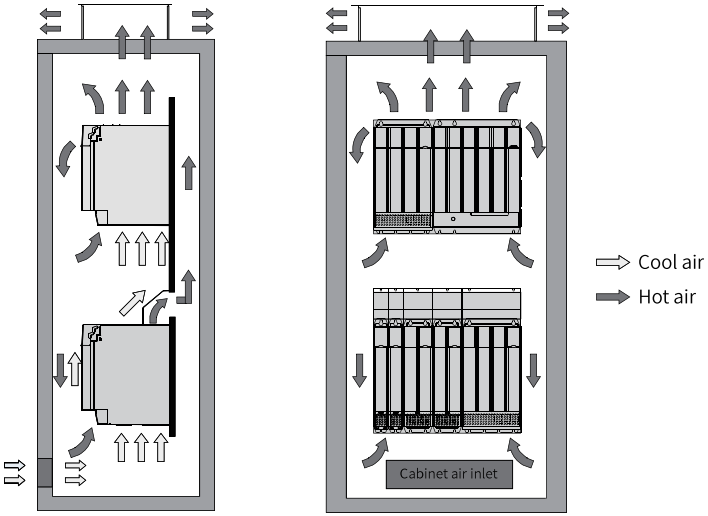

Figure 2-9 Hot air backflow in the passive air ventilation mode (without isolation devices)

Therefore, in passive air ventilation, use an isolating device in the cabinet to prevent backflow of hot air. An isolation device can be a plate or an exhaust duct.

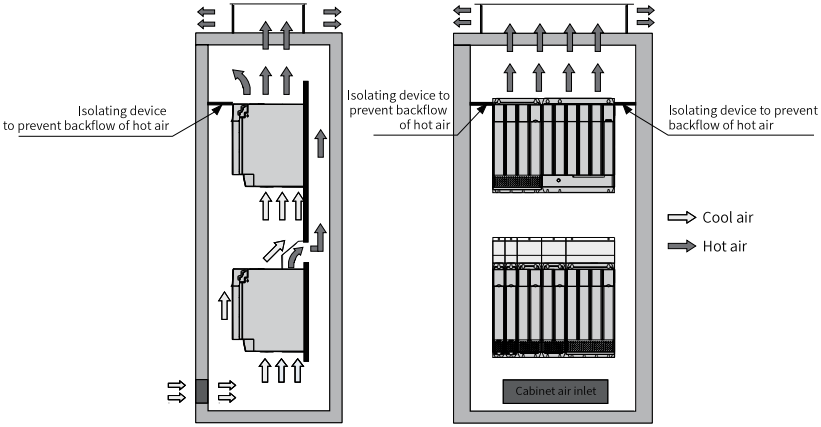

Figure 2-10 Backflow of hot air in a self-ventilated cabinet (with isolation devices)

The temperature at the air outlet of the power supply unit and the drive unit is high and the density at the air outlet is lower than that at the air inlet. To ensure that hot air can be exhausted to the outside of the cabinet, the minimum effective ventilation areas of the cabinet air outlet must meet the following requirements when passive air ventilation is used.

Table 2–8 Minimum effective ventilation area of the air outlet of the power supply unit in the passive air ventilation mode

Power Supply Unit Model	Minimum Effective Ventilation Area of the Cabinet Air Outlet (cm^2)
MD810-20M4T22GXXX	24
MD810-20M4T45GXXX	80
MD810-20M4T110GXXX	145
MD810-20M4T160GXXX	240
MD810-20M4T355GXXX	240

Table 2–9 Minimum effective ventilation area of the air outlet of the drive unit in the passive air ventilation mode

Drive Unit Model	Minimum Effective Ventilation Area of the Cabinet Air Outlet (cm^2)
MD810-50M4T1.5GXXX	24
MD810-50M4T2.2GXXX	24
MD810-50M4T3.7GXXX	24
MD810-50M4T5.5GXXX	24
MD810-50M4T7.5GXXX	24
MD810-50M4T11GXXX	72
MD810-50M4T15GXXX	72
MD810-50M4T18.5GXXX	72
MD810-50M4T22GXXX	112
MD810-50M4T30GXXX	112
MD810-50M4T37GXXX	112
MD810-50M4T45GXXX	145
MD810-50M4T55GXXX	145
MD810-50M4T75GXXX	145
MD810-50M4T90GXXX	235.1
MD810-50M4T110GXXX	235.1
MD810-50M4T132GXXX	235.1
MD810-50M4T160GXXX	235.1
MD810-50M4T200GXXXH	2100
MD810-50M4T250GXXXH	2100
MD810-50M4T315GXXXH	2100
MD810-50M4T355GXXXH	2100
MD810-50M4TD1.5GXXX	24
MD810-50M4TD2.2GXXX	24
MD810-50M4TD3.7GXXX	24
MD810-50M4TD5.5GXXX	72
MD810-50M4TD7.5GXXX	72
MD810-50M4TD11GXXX	112
MD810-50M4TD15GXXX	112
MD810-50M4TD18.5GXXX	112

Note

The air volume of the selected fan cannot be smaller than the maximum air volume Qmax. If a single fan cannot meet this requirement, use multiple fans.

- Active air ventilation
  In the active air ventilation mode, a fan is installed at the top of the cabinet to draw hot air out of the cabinet. Active ventilation is commonly used.

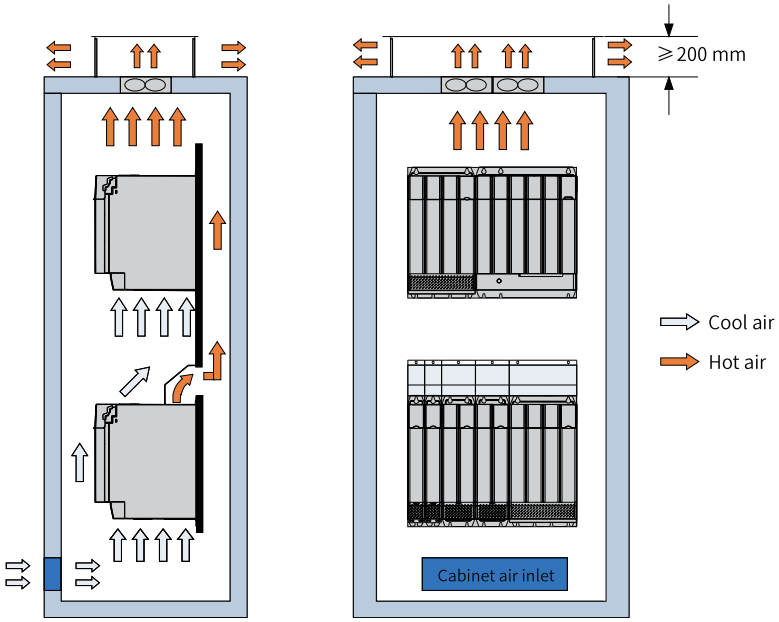

Figure 2-11 Cabinet air outlet system

Note

The air volume of the selected fan cannot be smaller than the maximum air volume Qmax. If a single fan cannot meet this requirement. multiple fans can be used.

To ensure that the hot air can be exhausted to the outside, the total air volume of the fan cannot be smaller than that of all units in the cabinet. *"Table 2–10 " on page 60* and *"Table 2–11 " on page 60* describe the cooling air volume required for the power supply unit and power unit.

Table 2–10 Cooling air volume of the power supply unit

Power Supply Unit Model	Cooling Air Volume (CFM)
MD810-20M4T22GXXX	15
MD810-20M4T45GXXX	40
MD810-20M4T110GXXX	100
MD810-20M4T160GXXX	285
MD810-20M4T355GXXX	310

Table 2–11 Cooling air volume of the drive unit

Drive Unit Model	Cooling Air Volume (CFM)
MD810-50M4T1.5GXXX	10
MD810-50M4T2.2GXXX	10
MD810-50M4T3.7GXXX	10
MD810-50M4T5.5GXXX	10
MD810-50M4T7.5GXXX	10
MD810-50M4T11GXXX	40
MD810-50M4T15GXXX	40
MD810-50M4T18.5GXXX	55
MD810-50M4T22GXXX	65
MD810-50M4T30GXXX	75
MD810-50M4T37GXXX	105
MD810-50M4T45GXXX	130
MD810-50M4T55GXXX	175
MD810-50M4T75GXXX	195
MD810-50M4T90GXXX	145
MD810-50M4T110GXXX	311
MD810-50M4T132GXXX	270
MD810-50M4T160GXXX	270
MD810-50M4T200GXXXH	265
MD810-50M4T250GXXXH	353
MD810-50M4T315GXXXH	447
MD810-50M4T355GXXXH	706
MD810-50M4TD1.5GXXX	11
MD810-50M4TD2.2GXXX	11
MD810-50M4TD3.7GXXX	11
MD810-50M4TD5.5GXXX	16
MD810-50M4TD7.5GXXX	21
MD810-50M4TD11GXXX	39
MD810-50M4TD15GXXX	37
MD810-50M4TD18.5GXXX	104
Note: 1 CFM = 0.02832 m^3/min	

Cabinet fan selection

Cabinet fan selection procedure:

1. Calculate the cooling air volume required for all drive units according to *"Table 2–10 " on page 60* and *"Table 2–11 " on page 60*.
2. Determine the maximum air flow value (Qmax) of the cabinet fan.
3. Determine the specification and quantity of the fan based on the maximum air volume (Qmax).

Where:

The maximum air volume of the cabinet is 1.3 to 1.5 times the sum of the cooling air volume.

The maximum air volume of the cabinet is 1.6 to 2.2 times the sum of the cooling air volume if mesh filters, shutters, or other components are installed at the cabinet air outlet.

Note

The air volume of the selected fan cannot be smaller than the maximum air volume Qmax. If a single fan cannot meet this requirement. multiple fans can be used.

The common specifications of the fan air volume is shown below.

Air flow	Air flow	Nominal voltage	Frequency	Sound pressure level	Sound power level	Sintec sleeve bearings / Ball bearings	Power input	Nominal speed	Temperature range	Service life L_{10} at 40 °C	at T_{max}	Curve
m^3/h	CFM	V	Hz	dB(A)	Bel(A)	□/■	Watts	RPM	°C	Hours	Hours	
320	188,3	230	50	51	6,4	■	27,0	2 800	-25...+55	60 000 / 32 000		1
380	223,6	115	60	56	6,8	■	28,0	3 350	-25...+65	55 000 / 18 000		2

This specification refers to the maximum air volume (Qmax) of the fan.

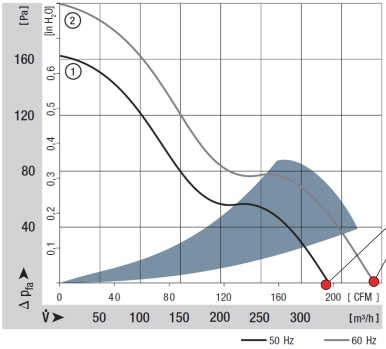

Maximum air volume (Qmax)

Figure 2-12 Q_{max} of a system fan

3 Electrical Design

3.1 Electrical Wiring Diagram

If a drive unit fails, you need to power off the faulty drive unit and the power supply unit, replace with a new drive unit, and then power on the power supply unit and the new drive unit. To ensure that the power supply unit can operate without power-off during this case, you can install a DC soft charge unit for each drive unit. For details, see *"Figure 3–2 " on page 63* .

Warning

- The drive unit has a built-in fuse. Never power on the drive unit independently without a DC soft charge unit installed. Otherwise, the drive unit will be damaged. *"Figure 3–1 " on page 62* describes the correct and incorrect wiring methods.
- In the application of common DC bus, never connect electrical switches, such as air switches or circuit breakers, in series in the bus to individually control the power-on and power-off of the drive unit. Otherwise, when the system is powered on, the drive unit will be powered on directly. This will damage the drive unit due to excessive inrush current.

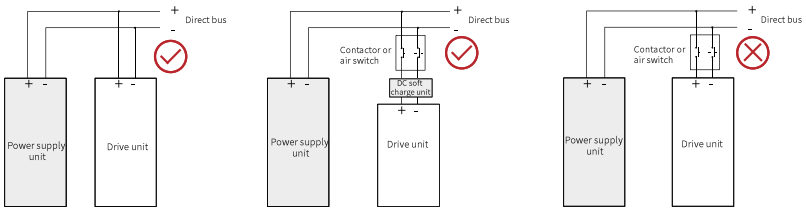

Figure 3-1 DC bus wiring

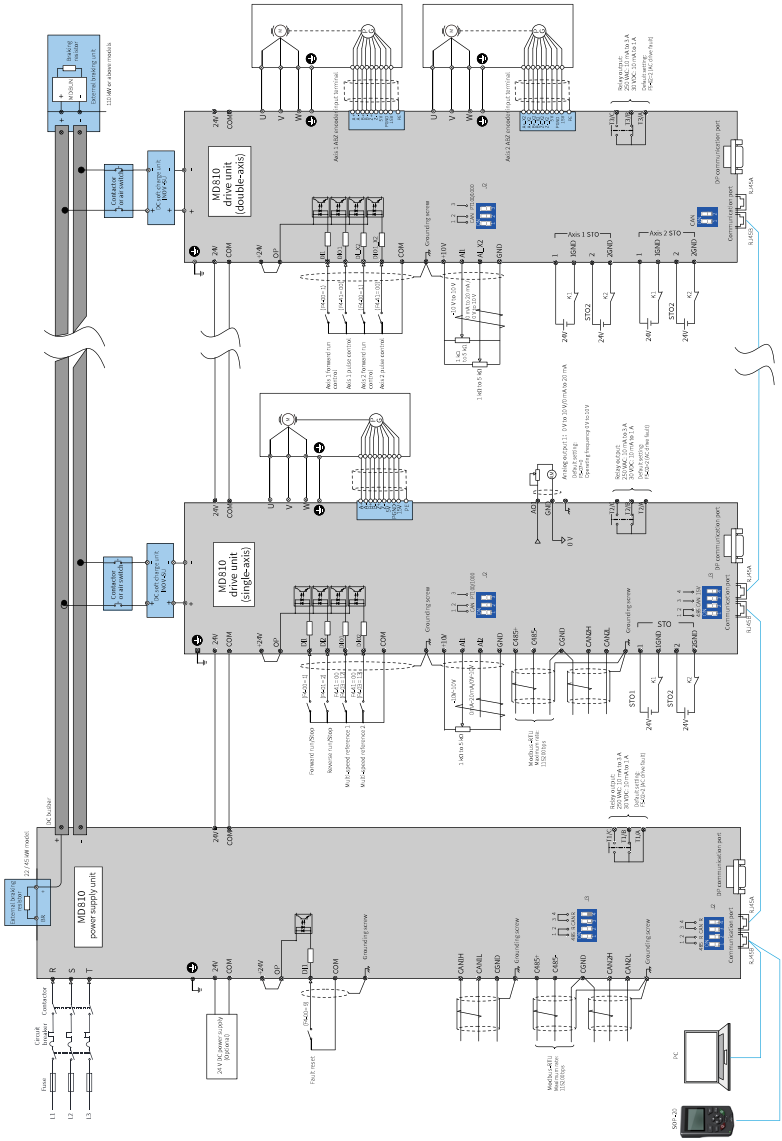

Figure 3-2 Electrical connection

3.2 Layout and Description of Main Circuit Terminals

3.2.1 Arrangement and Definition of Main Circuit Terminals for the Power Supply Unit

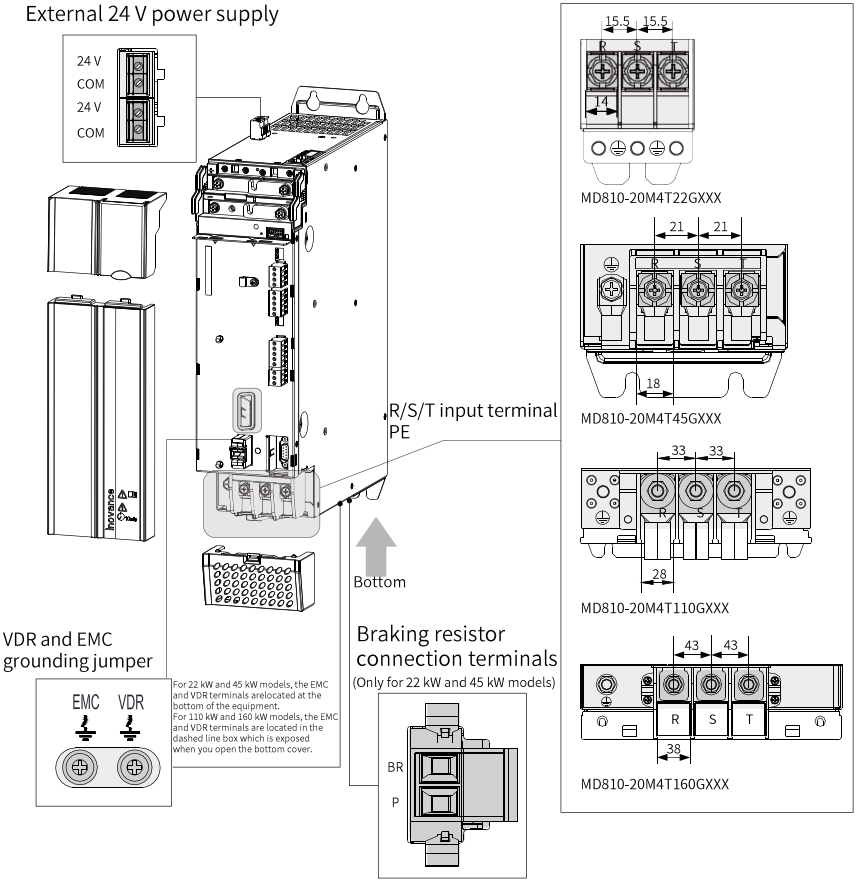

Figure 3-3 Arrangement and dimensions (mm) of main circuit terminals for the booksize power supply unit

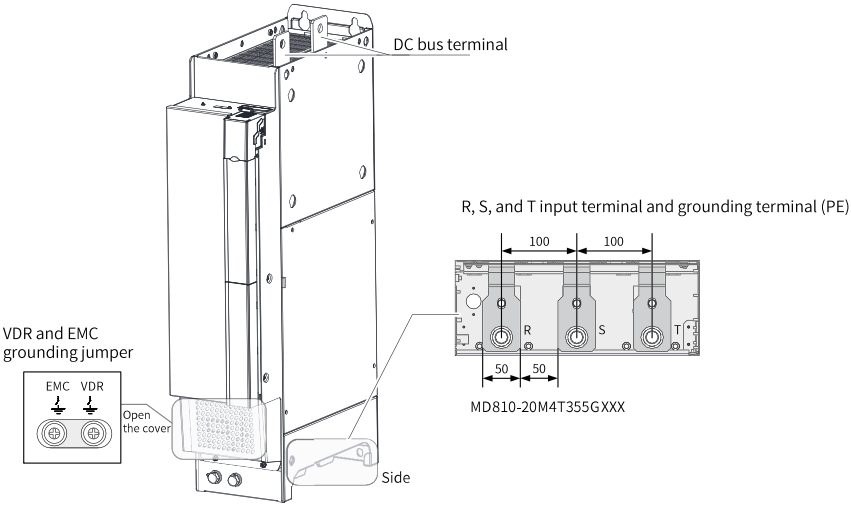

Figure 3-4 Arrangement and dimensions (mm) of main circuit terminals for the vertical tower power supply unit

Table 3–1 Descriptions of main circuit terminals

Terminal Mark	Name	Function
R, S, and T	Three-phase AC input terminal	Used to connect the three-phase AC input power supply.
(+), (-)	DC bus terminal	/
⏚	Grounding terminal (PE)	Used for protective grounding.
BR, P	Braking resistor connection terminals	Used to connect the braking resistor.
24V, COM	Terminal for external 24 V power supply input	External power 24 V power input for the internal control module with the minimum current of 1 A
EMC, VDR	VDR and EMC grounding jumper	/

3.2.2 Arrangement and Definition of Main Circuit Terminals for the Drive Unit (Single-Axis)

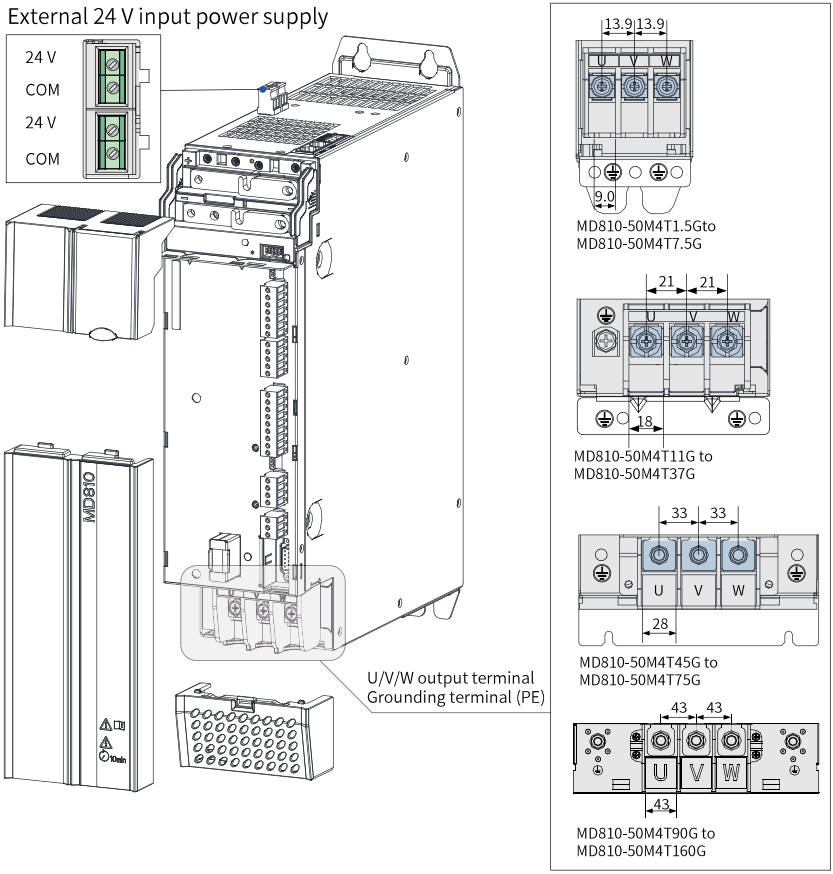

Figure 3-5 Arrangement and dimensions (mm) of main circuit terminals for the booksize drive unit (single-axis)

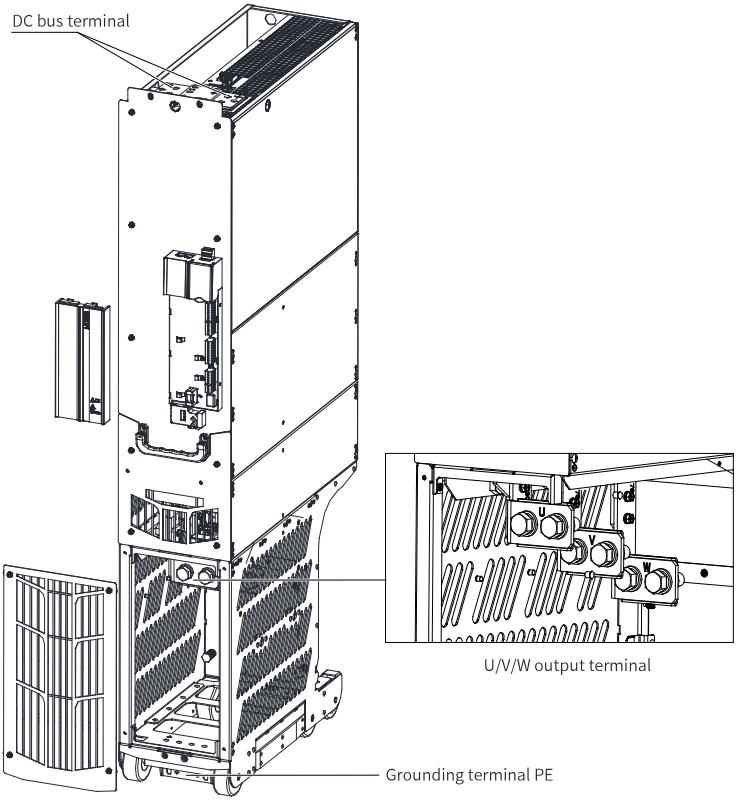

Figure 3-6 Arrangement and dimensions (mm) of main circuit terminals for the vertical tower drive unit (single-axis)

Table 3–2 Descriptions of main circuit terminals

Terminal Mark	Terminal Name	Function
U, V, W	Three-phase AC output	Used to connect the three-phase motor.
(+), (–)	DC bus terminal	/
⏚	Grounding terminal (PE)	Used for protective grounding.
24V, COM	Terminal for external 24 V power supply input	External 24 V power supply input for internal control module with the minimum current of 1 A

3.2.3 Arrangement and Definition of Main Circuit Terminals for the Drive Unit (Dual-Axis)

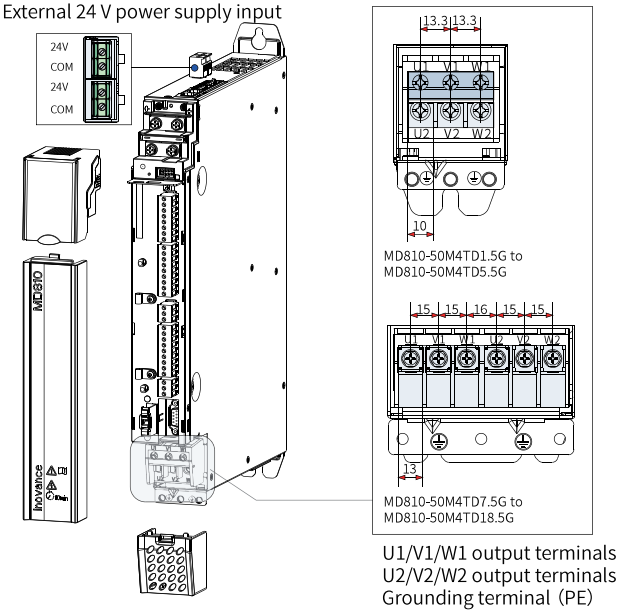

Figure 3-7 Arrangement and dimensions of main circuit terminals

Table 3–3 Descriptions of main circuit terminals

Terminal Mark	Name	Function
U1, V1, W1 U2, V2, W2	Three-phase AC output terminal	Used to connect the three-phase motor.
(+), (–)	DC bus terminal	/
⏚	Grounding terminal (PE)	Used for protective grounding.
24V, COM	Terminal for external 24 V power supply input	External 24 V power supply input for internal control module with the minimum current of 1 A

3.3 Wiring Descriptions of Main Circuit Terminals

Three-phase AC input terminals R, S, and T (power supply unit input side)

- The cable connection on the input side of the power supply unit has no requirements on the phase sequence.
- The specifications and installation method of external power cables must comply with local regulations and related IEC requirements.
- Use copper conductors of a proper size as power cables according to the recommended values in *"Table 3–5 " on page 74*.
- Install the filter close to the input terminals of the power supply unit, and keep the cable shorter than 30 cm. Connect the grounding terminal of the filter and that of the power supply unit, and install the filter and the power supply unit on the same conductive installation surface, which is connected to the main ground of the cabinet.

DC bus terminals + and -

- After switching off the AC drive, wait for at least 10 minutes before further operations until the CHARGE indicator is off, because DC bus terminals carry a residual voltage after power-off.
- When using external braking components for 110 kW, 160 kW, and 355 kW power supply units, ensure that + and - terminals must be connected correctly. Failure to comply will damage the power supply unit and the braking components or even lead to fire.
- The cable length of the braking unit must not exceed 100 m. Use twisted pair wires or closely routed pair wires for parallel connection.
- Do not connect the braking resistor directly to the DC bus. Failure to comply will cause damage to the AC drive or even a fire.

Three-phase AC output terminals U, V, W (drive unit output side)

- The specifications and installation method of external power cables must comply with local regulations and related IEC requirements.
- Do not connect a capacitor or surge suppression device to the output side of the drive unit. Failure to comply may lead to frequent fault protection or even damage the AC drive.
- Due to distributed capacitance, overlong motor cables are very likely to cause electrical resonance, which damages the motor insulation or generates large leakage current. This will trigger drive overcurrent protection. In this case, install an AC output reactor close to the drive when the motor cable length exceeds 100 m.
- It is recommended to use the shielded cable for the output motor cable. Use the optional ground bracket of cable shield to fix the shield, as shown in the figure below. Or use the grounding bracket of the power cable shield to connect the shield in 360°, and crimp the shield drain wire to the PE terminal.

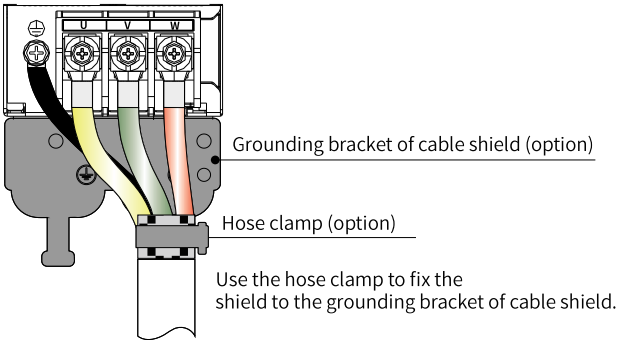

Figure 3-8 Installing the grounding bracket of the cable shield

- Keep the shield drain wire of the motor cable as short as possible, and ensure that the the wire length is equal to or shorter than 5 times the diameter, as shown in the figure below.

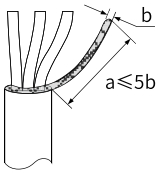

Figure 3-9 Drain wire of the motor cable shield

Note

For selection of the cable shield ground bracket, see *"4.4 Ground Bracket of Cable Shield" on page 165*.

Terminal for external 24 V power supply input

The product consists of an external 24 V power supply connected via a 24 V terminal at the top and the cascaded power supply and drive units. After the power supply unit and the drive units are connected, the control part can normally operate without any strong current added. You can set parameters and query faults, improving security greatly.

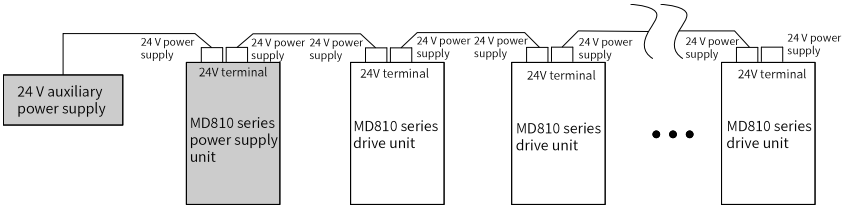

Note

- The external 24 V power supply provides each unit with current of 1 A.
- The external 24 V power supply is optional without affecting normal use of the unit.

Braking resistor connection terminals BR and P

- Select a braking resistor based on the recommendation. Ensure that the cable connecting the braking resistor and terminals (+) and BR is shorter than 5 m. Failure to comply may result in damage to the power supply unit.
- Keep the braking resistor away from combustibles. Avoid igniting the surrounding components due to overheating of the braking resistor.
- After connecting the braking resistor, set F1–02 according to the actual load.

Grounding terminal (PE)

- Ground the terminal reliably. Failure to comply may result in operation abnormality and even damage to the product.
- The grounding (PE) wire and neutral wire don't share a terminal in the power system.
- Select the size of the protective grounding conductor according to *"Table 3–5 " on page 74*.
- Use a yellow-green cable to connect the protective conductor.
- Install the power supply unit and the drive unit on a conductive metal mounting surface to ensure that the entire conductive bottom of the unit is properly overlapped with the installation surface.
- Install the filter, the reactor, and the power supply unit on the same installation surface to ensure performance of the filter and the reactor.

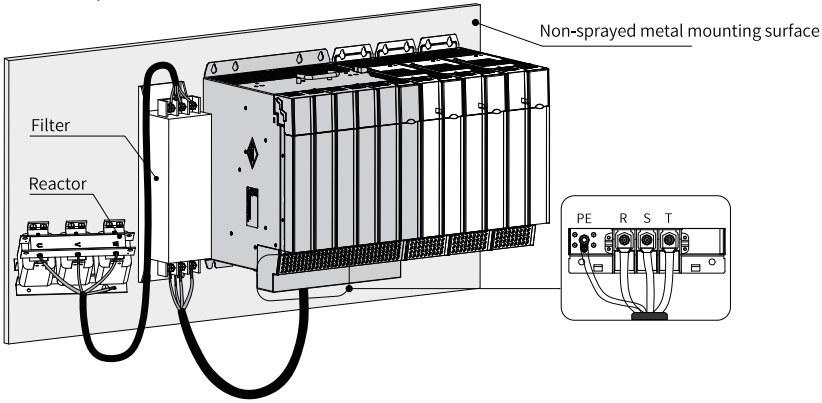

Figure 3-10 Protective grounding connection of main circuit terminals

VDR and EMC grounding jumper

- The AC drive is applicable to power grid systems with neutral grounding. If the AC drive is used in IT power system (where the neutral point is not grounded), remove the VDR and EMC grounding jumpers. In addition, do not install the filter. Failure to comply may result in personal injury or damage to the AC drive.
- Where a residual current operated protector is configured, if leakage protector is tripped during startup, remove the screw of the EMC grounding jumper.

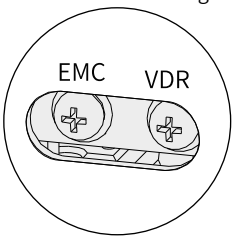

Figure 3-11 VDR and EMC grounding jumper

3.4 Main Circuit Cable Selection

Main circuit cable selection requirement

It is recommended that the input main circuit cable use a symmetrical shielded cable. Compared with four-conductor cables, symmetrical shielded cables can reduce electromagnetic radiation in the whole transmission system.

To comply with the EMC standards, use shielded cables. The shielded cables are divided into three-conductor cables and four-conductor cables, as shown below. If the conductivity of the three-conductor cable shield cannot meet requirements, add an independent PE cable. For the four-conductor cable, one conductor is used as the PE cable. To suppress radio frequency interference effectively, use coaxial copper braid as the cable shield. To enhance the shielding performance and conductivity, the braided density of the shield must be greater than 90%.

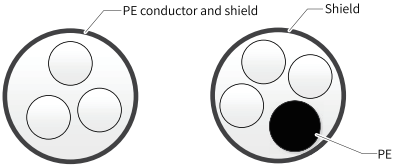

Figure 3-12 Recommended power cable types

Specifications of recommended main circuit cables

Table 3–4 Cable specifications and tightening torque of main circuit cables of the power supply unit (Compliant with CE certification)

Power Supply Unit Model	Bus Positive (+), Negative (–)	Input Terminals R, S, and T				Grounding Terminal PE				Connecting Busbar	
	Cable (mm^2)<1>	Cable (mm^2)<1>	Cable Lug Model	Screw	Tightening Torque N·m	Cable (mm^2)<1>	Cable Lug Model	Screw	Tightening Torque N·m	Screw	Tightening Torque N·m
MD810-20M4T22GXXX	16	16	GTNR16-6	M6	3	16	GTNR16-5	M5	2.8	M5	2.8
MD810-20M4T45GXXX	35	50	BC50-5	M5	2.8	25	GTNR25-6	M6	4.8	M5	2.8
MD810-20M4T110GXXX	120	120	BC120-10	M10	20	70	GTNR70-10	M10	20	M5	2.8
MD810-20M4T160GXXX(W)*	2 x 95	2 x 120	BC120-12	M12	35	120	BC120-12	M12	35	M5	2.8
MD810-20M4T355GXXX	4 x 120	4×150	BC150-16	M16	85	2 x 150	BC150-12	M12	35	/	/

Note

<1> Applicable to standards in China. 16 represents one single-phase 16 mm2 cable. 2 x 120 represents two single-phase 120 mm2 cables. The preceding recommended lugs are the TNR, TNS, GTNR, and BC series lugs from Suzhou Yuanli.

Notes:

1. Observe national or regional regulations during selection. The cables recommended in the preceding table meet the following conditions: PVC insulation and copper conductor. Heat resistance: maximum cable surface temperature not exceeding 70°C at an ambient temperature of 40°C (When the ambient temperature exceeds 40°C, contact Inovance); Cable layout type E is adopted (see IEC 60204-1).

2. If the conditions are different, you need to select the model according to actual conditions.

3. The recommended cables in the table can withstand overload (115% of rated load) for one hour.

4. The cables with the asterisk mark (*) must be connected through the copper busbar.

Table 3–5 Cable specifications and tightening torque of main circuit cables of the power supply unit (Compliant with UL certification)

Power Supply Unit Model	Bus Positive (+), Negative (–)	Input Terminals R, S, and T				Grounding Terminal PE				Connecting Busbar	
	Cable (AWG/ Kcmil)<2>	Cable (AWG/ Kcmil)<2>	Cable Lug Model	Screw	Tightening Torque N·m	Cable (AWG/ Kcmil)<2>	Cable Lug Model	Screw	Tightening Torque N·m	Screw	Tightening Torque N·m
MD810-20M4T22GXXX	4	6	TLK16-6	M6	3	6	TLK16-5	M5	2.8	M5	2.8
MD810-20M4T45GXXX	1	1/0	SQNBS60-6	M6	2.8	2	TLK25-6	M6	4.8	M5	2.8
MD810-20M4T110GXXX*	250kcmil	2x3/0	TLK95-10	M10	20	3/0	TLK95-10	M10	20	M5	2.8

Power Supply Unit Model	Bus Positive (+), Negative (–)	Input Terminals R, S, and T				Grounding Terminal PE				Connecting Busbar	
	Cable (AWG/ Kcmil)<2>	Cable (AWG/ Kcmil)<2>	Cable Lug Model	Screw	Tightening Torque N·m	Cable (AWG/ Kcmil)<2>	Cable Lug Model	Screw	Tightening Torque N·m	Screw	Tightening Torque N·m
MD810-20M4 T160GXXX(W)*	2 x 4 x 0	2 x 250kcmil	TLK150-12	M12	35	250kcmil	TLK150-12	M12	35	M5	2.8
MD810-20M4 T355GXXX	4 x 300kcmil	4 x 400kcmil	TLK240-16	M16	85	400kcmil	TLK240-12	M12	35	/	/

Note

<1>: Applicable to AWG standards, in which 4 represents 4AWG, 1/0 represents 0AWG, and 2 x 250 kcmil represents two 250 kcmil cables. The preceding recommended lugs are the TLK, RNB, and SQNBS series lugs from KST.

Notes:

1. Observe national or regional regulations during selection. The cables recommended in the preceding table meet the following conditions: PVC insulation and copper conductor. Heat resistance: maximum cable surface temperature not exceeding 75°C at an ambient temperature of 40°C (When the ambient temperature exceeds 40°C, contact Inovance); Cable layout type E is adopted (see IEC 60204-1).

2. In addition to the 125% overload requirement as specified by UL standards, it is recommended that the cables withstand 1.5 times the rated load for 1 hour.

3. The cables with the asterisk mark (*) must be connected through the copper busbar.

4. If the conditions are different, you need to select the model according to actual conditions.

Table 3–6 Cable specifications and tightening torque of main circuit cables of the drive unit (Compliant with CE certification)

Drive Unit Model	Bus Positive (+), Negative (–)	Output Terminals (U, V, W)				Grounding Terminal PE				Connecting Busbar	
	Cable (mm^2)<1>	Cable (mm^2)<1>	Cable Lug Model	Screw	Tightening Torque N·m	Cable (mm^2)<1>	Cable Lug Model	Screw	Tightening Torque N·m	Screw	Tightening Torque N·m
MD810-50M4T1.5GXXX	0.75	0.75	TNR0.75-5	M5	2.8	0.75	TNR0.75-5	M5	2.8	M5	2.8
MD810-50M4T2.2GXXX	0.75	0.75	TNR0.75-5	M5	2.8	0.75	TNR0.75-5	M5	2.8	M5	2.8
MD810-50M4T3.7GXXX	1.5	1	TNR1.25-5	M5	2.8	1	TNR1.25-5	M5	2.8	M5	2.8
MD810-50M4T5.5GXXX	2.5	1.5	TNS2-5	M5	2.8	1.5	TNR2-5	M5	2.8	M5	2.8
MD810-50M4T7.5GXXX	4	2.5	TNS2-5	M5	2.8	2.5	TNR2-5	M5	2.8	M5	2.8
MD810-50M4T11GXXX (W)	6	4	TNR3.5-5	M5	2.8	4	TNR3.5-6	M6	2.8	M5	2.8
MD810-50M4T15GXXX (W)	10	6	TNR5.5-5	M5	2.8	6	TNR5.5-6	M6	2.8	M5	2.8
MD810-50M4T18.5GXXX(W)	10	10	TNR8-5	M5	2.8	10	TNR8-6	M6	2.8	M5	2.8
MD810-50M4T22GXXX(W)	16	10	TNR8-6	M6	4.8	10	TNR8-6	M6	4.8	M5	2.8
MD810-50M4T30GXXX (W)	25	16	GTNR16-6	M6	4.8	16	GTNR16-6	M6	4.8	M5	2.8
MD810-50M4T37GXXX (W)	35	25	GTNR25-6	M6	4.8	25	GTNR25-6	M6	4.8	M5	2.8

Drive Unit Model	Bus Positive (+), Negative (–)	Output Terminals (U, V, W)				Grounding Terminal PE				Connecting Busbar	
	Cable (mm^2)<1>	Cable (mm^2)<1>	Cable Lug Model	Screw	Tightening Torque N·m	Cable (mm^2)<1>	Cable Lug Model	Screw	Tightening Torque N·m	Screw	Tightening Torque N·m
MD810-50M4T45GXXX	50	35	GTNR35-10	M10	20	25	GTNR25-10	M10	20	M5	2.8
MD810-50M4T55GXXX	70	50	GTNR50-10	M10	20	35	GTNR35-10	M10	20	M5	2.8
MD810-50M4T75GXXX	95	70	GTNR70-10	M10	20	50	GTNR50-10	M10	20	M5	2.8
MD810-50M4T90GXXX	120	120	GTNR120-12	M12	35	70	GTNR70-10	M10	20	M5	2.8
MD810-50M4T110GXXX	185	150	BC150-12	M12	35	95	GTNR95-10	M10	20	M5	2.8
MD810-50M4T132GXXX	2 x 95	185	BC185-12	M12	35	95	GTNR95-10	M10	20	M5	2.8
MD810-50M4T160GXXX	2 x 120	2 x 95	BC120-12	M12	35	120	BC120-10	M10	20	M5	2.8
MD810-50M4T200GXXXH	2 x 150	2 x 150	BC150-12	M12	35	2 x 95	BC95-8	M8	13	/	/
MD810-50M4T250GXXXH	4 x 95	2 x 185	BC185-12	M12	35	2 x 95	BC95-8	M8	13	/	/
MD810-50M4T315GXXXH	4 x 120	4×120	BC120-16	M16	85	2 x 120	BC120-10	M8	13	/	/
MD810-50M4T355GXXXH	4 x 150	4×150	BC150-16	M16	85	2 x 150	BC150-10	M8	13	/	/
MD810-50M4TD1.5GXXX	1.5	0.75	TNR0.75-5	M5	2.8	0.75	TNR0.75-5	M5	2.8	M5	2.8
MD810-50M4TD2.2GXXX	2.5	0.75	TNR1.25-5	M5	2.8	0.75	TNR1.25-5	M5	2.8	M5	2.8

Drive Unit Model	Bus Positive (+), Negative (–)	Output Terminals (U, V, W)				Grounding Terminal PE				Connecting Busbar	
	Cable (mm^2)<1>	Cable (mm^2)<1>	Cable Lug Model	Screw	Tightening Torque N·m	Cable (mm^2)<1>	Cable Lug Model	Screw	Tightening Torque N·m	Screw	Tightening Torque N·m
MD810-50M4TD3.7GXXX	4	1	TNR2-5	M5	2.8	1	TNR2-5	M5	2.8	M5	2.8
MD810-50M4TD5.5GXXX	10	1.5	TNR3.5-5	M5	2.8	1.5	TNR3.5-5	M5	2.8	M5	2.8
MD810-50M4TD7.5GXXX(W)	10	2.5	TNR5.5-5	M5	2.8	2.5	TNR5.5-6	M6	4.8	M5	2.8
MD810-50M4TD11GXXX (W)	25	4	TNR8-5	M5	2.8	4	TNR8-6	M6	4.8	M5	2.8
MD810-50M4TD15GXXX (W)	35	6	TNR8-5	M5	2.8	6	TNR8-6	M6	4.8	M5	2.8
MD810-50M4TD18.5GXXX(W)	35	10	TNR14-5	M5	2.0	10	TNR14-5	M5	2.0	M5	2.8

Note

<1> Applicable to standards in China. 10 represents one single-phase 10 mm2 cable. 2 x 95 represents two single-phase 95 mm2 cables. The preceding recommended lugs are the TNR, TNS, GTNR, and BC series lugs from Suzhou Yuanli.

Notes:

1. Observe national or regional regulations during selection. The cables recommended in the preceding table meet the following conditions: PVC insulation and copper conductor. Heat resistance: maximum cable surface temperature not exceeding 70°C at an ambient temperature of 40°C (When the ambient temperature exceeds 40°C, contact Inovance); Cable layout type E is adopted (see IEC 60204-1).

2. If the conditions are different, you need to select the model according to actual conditions.

3. The recommended cables in the table can withstand overload (115% of rated load) for one hour.

Table 3–7 Cable specifications and tightening torque of main circuit cables of the drive unit (Compliant with UL certification)

Drive Unit Model	Bus Positive (+), Negative (–)	Output Terminals (U, V, W)				Grounding Terminal PE				Connecting Busbar	
	Cable (AWG/Kcmil)<2>	Cable (AWG/Kcmil)<2>	Cable Lug Model	Screw	Tightening Torque N·m	Cable (AWG/Kcmil)<2>	Cable Lug Model	Screw	Tightening Torque N·m	Screw	Tightening Torque N·m
MD810-50M4T1.5GXXX	14	14	TLK2.5-5	M5	2.8	14	TLK2.5-5	M5	2.8	M5	2.8
MD810-50M4T2.2GXXX	14	14	TLK2.5-5	M5	2.8	14	TLK2.5-5	M5	2.8	M5	2.8
MD810-50M4T3.7GXXX	12	14	TLK2.5-5	M5	2.8	12	TLK4-5	M5	2.8	M5	2.8
MD810-50M4T5.5GXXX	10	12	RNBS3-5	M5	2.8	10	TLK6-5	M5	2.8	M5	2.8
MD810-50M4T7.5GXXX	8	10	RNBS5-5	M5	2.8	8	TLK10-5	M5	2.8	M5	2.8

Drive Unit Model	Bus Positive (+), Negative (–)	Output Terminals (U, V, W)				Grounding Terminal PE				Connecting Busbar	
	Cable (AWG/ Kcmil)<2>	Cable (AWG/ Kcmil)<2>	Cable Lug Model	Screw	Tightening Torque N·m	Cable (AWG/ Kcmil)<2>	Cable Lug Model	Screw	Tightening Torque N·m	Screw	Tightening Torque N·m
MD810-50M4T11GXXX (W)	8	8	TLK10-5	M5	2.8	8	TLK10-5	M5	2.8	M5	2.8
MD810-50M4T15GXXX (W)	6	8	TLK10-5	M5	2.8	6	TLK16-5	M5	2.8	M5	2.8
MD810-50M4 T18.5GXXX(W)	4	6	TLK16-5	M5	2.8	6	TLK16-5	M5	2.8	M5	2.8
MD810-50M4T22GXXX(W)	4	4	TLK25-5	M5	2.8	6	TLK16-5	M5	2.8	M5	2.8
MD810-50M4T30GXXX (W)	2	4	TLK25-6	M6	4.8	4	TLK25-6	M6	4.8	M5	2.8
MD810-50M4T37GXXX (W)	1	2	TLK35-6	M6	4.8	4	TLK25-6	M6	4.8	M5	2.8
MD810-50M4T45GXXX	1/0	1/0	TLK50-10	M10	20	2	TLK35-10	M10	20	M5	2.8
MD810-50M4T55GXXX	3/0	2/0	TLK70-10	M10	20	1/0	TLK50-10	M10	20	M5	2.8
MD810-50M4T75GXXX	250kcmil	4/0	SQNB S100-10	M10	20	2/0	TLK70-10	M10	20	M5	2.8
MD810-50M4T90GXXX	2x2/0	300kcmil	TL K150-12	M12	35	2/0	TLK70-10	M10	20	M5	2.8
MD810-50M4T110GXXX	2x3/0	400kcmil	TLK240-12	M12	35	3/0	TLK95-10	M10	20	M5	2.8
MD810-50M4T132GXXX	2 x 4 x 0	2 x 3 x 0	TLK95-12	M12	35	4/0	TLK120-10	M10	20	M5	2.8

Drive Unit Model	Bus Positive (+), Negative (–)	Output Terminals (U, V, W)				Grounding Terminal PE				Connecting Busbar	
	Cable (AWG/ Kcmil)<2>	Cable (AWG/ Kcmil)<2>	Cable Lug Model	Screw	Tightening Torque N·m	Cable (AWG/ Kcmil)<2>	Cable Lug Model	Screw	Tightening Torque N·m	Screw	Tightening Torque N·m
MD810-50M4T160GXXX	2 x 250kcmil	2 x 4 x 0	TLK120-10	M10	20	250kcmil	TLK150-10	M10	20	M5	2.8
MD810-50M4T200GXXXH	2 x 350kcmil	2 x 300 kcmil	TLK150-10	M10	20	2 x 3 x 0	TLK95-8	M8	13	/	/
MD810-50M4T250GXXXH	2 x 500kcmil	2 x 400 kcmil	SQNBS200-10	M10	20	2 x 250kcmil	TLK150-8	M8	13	/	/
MD810-50M4T315GXXXH	4 x 350 kcmil	4 x 300kcmil	TLK150-10	M10	20	2 x 350kcmil	TLK185-10	M10	20	/	/
MD810-50M4T355GXXXH	4 x 400kcmil	4 x 350 kcmil	TLK150-10	M10	20	2 x 350kcmil	TLK185-10	M10	20	/	/
MD810-50M4TD1.5GXXX	14	14	TLK2.5-5	M5	2.8	14	TLK2.5-5	M5	2.8	M5	2.8
MD810-50M4TD2.2GXXX	14	14	TLK2.5-5	M5	2.8	14	TLK2.5-5	M5	2.8	M5	2.8
MD810-50M4TD3.7GXXX	12	12	TLK4-5	M5	2.8	12	TLK4-5	M5	2.8	M5	2.8
MD810-50M4TD5.5GXXX	10	10	RNBS5-5	M5	2.8	10	TLK6-5	M5	2.8	M5	2.8
MD810-50M4TD7.5GXXX(W)	8	8	TLK10-5	M5	2.8	8	TLK10-6	M6	4.8	M5	2.8
MD810-50M4TD11GXXX (W)	8	8	TLK10-5	M5	2.8	8	TLK10-6	M6	4.8	M5	2.8

Drive Unit Model	Bus Positive (+), Negative (–)	Output Terminals (U, V, W)				Grounding Terminal PE				Connecting Busbar	
	Cable (AWG/ Kcmil)<2>	Cable (AWG/ Kcmil)<2>	Cable Lug Model	Screw	Tightening Torque N·m	Cable (AWG/ Kcmil)<2>	Cable Lug Model	Screw	Tightening Torque N·m	Screw	Tightening Torque N·m
MD810-50M4TD15GXXX (W)	6	6	TLK16-5	M5	2.8	6	TLK16-6	M6	4.8	M5	2.8
MD810-50M4TD18.5GXXX(W)	4	4	RNBS22-5	M5	2.8	6	TLK16-6	M6	4.8	M5	2.8

Note

<2>: Applicable to AWG standards, in which 8 represents 8AWG, 1/0 represents 0AWG and 3/0 represents 000AWG; 2 x 300 kcmil represents two 300 kcmil cables. The preceding recommended lugs are the TLK, RNB, and SQNBS series lugs from KST.

Notes:

1. Observe national or regional regulations during selection. The cables recommended in the preceding table meet the following conditions: PVC insulation and copper conductor. Heat resistance: maximum cable surface temperature not exceeding 75°C at an ambient temperature of 40°C (When the ambient temperature exceeds 40°C, contact Inovance); Cable layout type E is adopted (see IEC 60204-1).

2. In addition to the 125% overload requirement as specified by UL standards, it is recommended that the cables withstand 1.5 times the rated load for 1 hour.

3. If the conditions are different, you need to select the model according to actual conditions.

Recommended cable lug

The cable lugs manufactured by Suzhou Yuanli are recommended, as shown below.

GTNR series

TNR series

TNS series

Note

For details on cable lug selection, see *"4.9.3 Cable Lug" on page 177*.

3.5 Layout and Description of Control Circuit Terminals

3.5.1 Layout and Description of Control Circuit Terminals for the Power Supply Unit

3.5.1.1 Relationship Between Power Supply Unit Models and Control Terminals

Type	Mark	Name	Power Supply Unit Model (MD810-20M4TXXGXXX)			Terminal Assignment
			G000, G100	G010, G110	G020, G120	
Communication terminal	CN1	CAN1 (communication terminal)	One	One	One	*"Table 3–8 " on page 86*
	CN2	External CAN2/ RS485 communication terminal	One	/	One	*"Table 3–9 " on page 86*
	None (DB9)	PROFIBUS DP communication terminal (DB9)	/	One	/	*"Table 3–12 " on page 87*
	RJ45A/RJ45B	RJ45 communication terminal	One	One	One	*"Table 3–13 " on page 88*
	ProfinetA and ProfinetB	PROFINET communication terminal	/	/	One	*"Table 3–14 " on page 89*
I/O terminal	CN3	DI terminal	One	One	One	*"Table 3–10 " on page 86*
	CN4	Relay terminal	One	One	One	*"Table 3–11 " on page 87*
DIP switch	S1	S1 DIP switch	One	One	One	*"Table 3–15 " on page 89*
	S2	S2 DIP switch	One	/	One	*"Table 3–16 " on page 90*
Terminal layout						
/			Power Supply Unit Model (MD810-20M4TXXGXXX)			/
			G000, G100	G010, G110	G020, G120	

Type	Mark	Name	Power Supply Unit Model (MD810-20M4TXXGXXX)			Terminal Assignment
			G000, G100	G010, G110	G020, G120	
Terminal layout			*"Figure 3–13 " on page 84*	*"Figure 3–14 " on page 85*	*"Figure 3–15 " on page 85*	/

Note

"One" indicates that the model has one terminal of this type. "-" indicates that the model does not have the terminal of this type.

3.5.1.2 Arrangement of Control Terminals for the Power Supply Unit

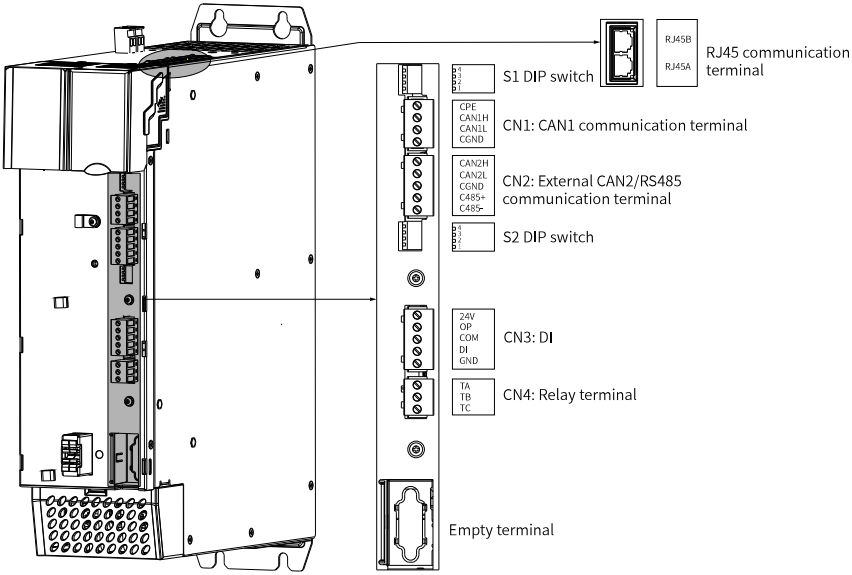

Figure 3-13 Control terminals of MD810-20M4TXXG000 and MD810-20M4TXXG100

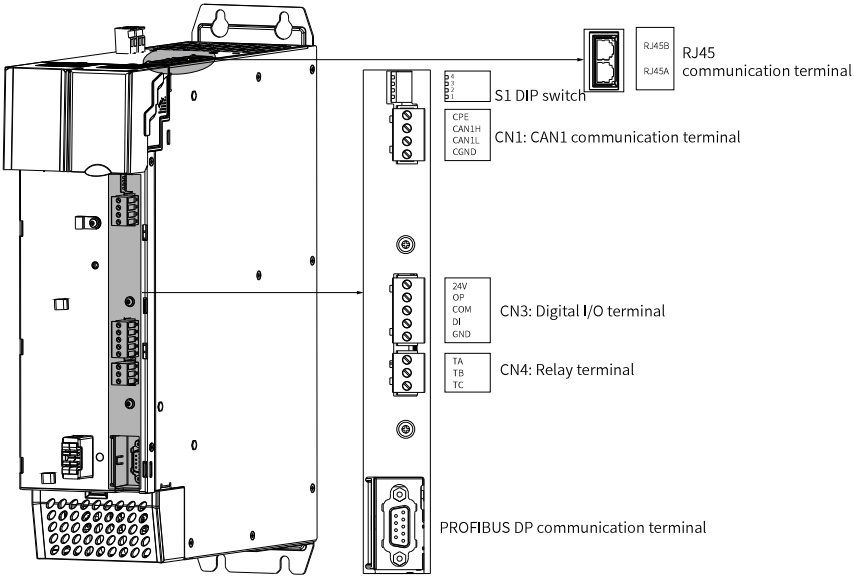

Figure 3-14 Control terminals of MD810-20M4TXXG010 and MD810-20M4TXXG110

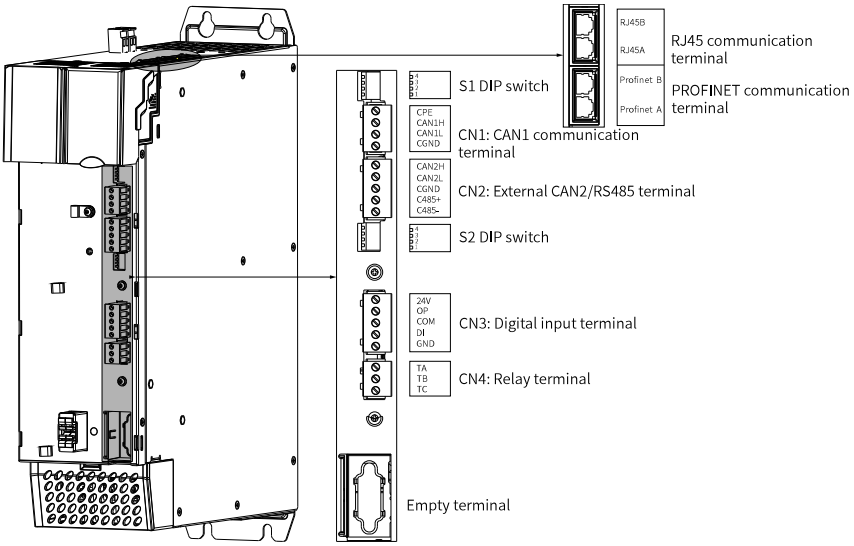

Figure 3-15 Control terminals of MD810-20M4TXXG020 and MD810-20M4TXXG120

3.5.1.3 Descriptions of Control Terminals for the Power Supply Unit

Table 3–8 CAN1 communication terminal CN1

Pin Mark	Pin Assignment	Performance
CAN1H	CAN_H signal of CAN communication	CANopen/CANlink communication protocol supported. The external terminal of CAN1 is used for communication with the host controller
CAN1L	CAN_L signal of CAN communication	
CGND	Communication common ground	
CPE	Network cable shield	

Table 3–9 External CAN2/RS485 communication terminal CN2

Pin Mark	Assignment	Performance Indicator
C485+	External RS485 communication positive signal	Used to communicate with the host controller (such as PLC) based on RS485
C485-	External RS485 communication negative signal	
CAN2H	CAN_H signal of CAN communication	CAN communication signal dedicated for synchronous control
CAN2L	CAN_L signal of CAN communication	
CGND	Communication common ground	/

Table 3–10 Digital input terminal CN3

Pin Mark	Assignment	Performance Indicator
DI	Common multi-function input	Programmable terminal for isolated sink/source input; operating voltage range: 9 V to 30 V; ineffective voltage: < 5 V; input impedance: 3 kΩ; response time: meeting the requirements for 100 Hz frequency input
OP	Multi-functional input common terminal	Internally isolated from COM and 24V; shorted to 24V using a U-type jumper
24V	Internal 24 V power supply provided by the drive unit	24 V ± 10%; no-load voltage: ⩽ 30 V; maximum output current: 200 mA; internally isolated from OP/CGND/GND.

Pin Mark	Assignment	Performance Indicator
COM	Internal 24 V grounding terminal provided by the drive	Internally isolated from CGND and GND
GND	Power supply reference ground	-

Table 3–11 Relay terminal CN4

Pin Mark	Assignment	Performance Indicator
TA/TB/TC	TA-TB: Normally closed TA-TC: Normally open	Contact capacity: 250 VAC / 3 A (COSØ=0.4) 30 VDC / 1 A

Table 3–12 PROFIBUS DP communication terminal (DB9)

Pin Mark	Assignment	Performance Indicator
Not connected	/	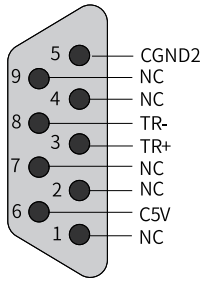
Not connected	/	
TR+	PROFIBUS DP bus positive end	
Not connected	/	
CGND	PROFIBUS DP bus power supply ground	
C5V	PROFIBUS DP bus power supply	
Not connected	/	
TR-	PROFIBUS DP bus negative end	
Not connected	/	

Table 3–13 RJ45 communication terminals RJ45A/ RJ45B

Pin Mark			Assignment	Performance Indicator	
RJ45A	1	CAN1H	CAN_H signal of CAN communication	CANopen/ CANlink supported; used for communication with the host controller and internal commissioning	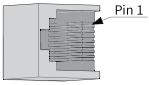
	2	CAN1L	CAN_L signal of CAN communication		
	3	CGND	Communication signal ground		
	4	RS485+	Positive RS485 communication signal	Internal bus, used only for the external operating panel and PC commissioning	
	5	RS485-	Negative RS485 communication signal		
	6	Not connected	/		
	7	Not connected	/		
	8	CGND	Communication signal ground		
RJ45B	1	CAN1H	CAN_H signal of CAN communication	CANopen/ CANlink supported; used for communication with the host controller and internal commissioning	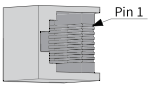
	2	CAN1L	CAN_L signal of CAN communication		
	3	CGND	Communication signal ground		
	4	RS485+	Positive RS485 communication signal	Internal bus, used only for the external operating panel and PC commissioning	
	5	RS485-	Negative RS485 communication signal		
	6	C7V	Used to power the external LCD operating panel	Power supply of the external LCD operating panel	
	7	C7V	Used to power the external LCD operating panel		
	8	CGND	Communication signal ground	Communica tion signal ground	

Caution

There is no power supply output for PN models. Connect the external LCD operating panel to the RJ45B port on the drive unit if needed.

Table 3–14 PROFINET communication terminals ProfinetA and ProfinetB

Pin Mark		Assignment	Performance Indicator	
1	TX+	Data transmitting+	The yellow indicator indicates that the link has been established. The green indicator indicates that the signal is normal.	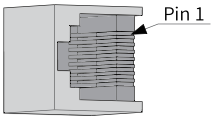
2	TX-	Data transmitting (-)		
3	RX+	Data receiving (+)		
6	RX-	Data receiving (-)		

Table 3–15 DIP switch S1

Function Description		DIP Position
RS485 termination resistor (during RS485 communication through terminals RJ45A/RJ45B)	1 and 2 set to ON: Termination resistor enabled	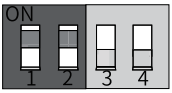
	Toggle positions 1 and 2 to OFF: Termination resistor not connected	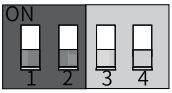
CAN1 termination resistor selection (during CAN communication through terminals RJ45A/RJ45B)	3 and 4 set to ON: Termination resistor enabled	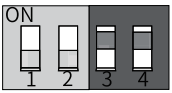
	Toggle positions 3 and 4 to OFF: Termination resistor not connected	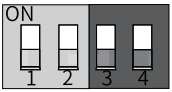

Table 3–16 DIP switch S2

Function Description		DIP Position
C485 termination resistor (during RS485 communication through external CAN2/ RS485 communication terminals marked by CN2)	1 and 2 set to ON: Termination resistor enabled	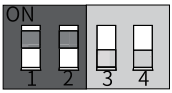
	Toggle positions 1 and 2 to OFF: Termination resistor not connected	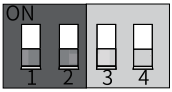
DIP switch for connecting the CAN2 termination resistor (during CAN communication through external CAN2/ RS485 communication terminals marked by CN2)	3 and 4 set to ON: Termination resistor enabled	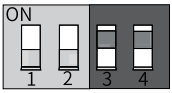
	Toggle positions 3 and 4 to OFF: Termination resistor not connected	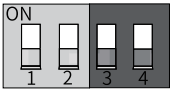

3.5.2 Layout and Description of Control Terminals for the Drive Unit (Single-Axis)

3.5.2.1 Relationship Between Drive Unit (Single Axis) Models and Control Terminals

Type	Mark	Terminal Name	Power Supply Unit Model (MD810-50M4TXXGXXX)								S1/S2 State
			G200	G201	G210	G211	G300	G400	G530	G531	
Communication terminal	CN4	External CAN2 terminal	-	-	one	one	-	-	-	-	*"Table 3–20 " on page 98*
		External CAN2/ RS485 communication terminal	one	one	-	-	one	one	-	-	*"Table 3–21 " on page 99*
	RJ45 A/ RJ45B	RJ45 communication terminal	one	one	one	one	one	one	one	one	*"Table 3–28 " on page 103*
	ECT-IN/ ECT-OUT	EtherCAT communication terminal	-	-	-	-	-	-	one	one	*"Table 3–29 " on page 104*
	None (DB9 terminal)	PROFIBUS DP communication terminal	Empty terminal	-	one	one	-	-	-	-	*"Table 3–24 " on page 100*
Encoder terminal	CN3	ABZ encoder terminal	one	one	one	one	Reserved	one	one	one	*"Table 3–19 " on page 98*
	None (DB9 terminal)	23-bit encoder terminal	-	-	-	-	one	-	-	-	*"Table 3–25 " on page 100*
	None (DB15 terminal)	Resolver encoder terminal	-	-	-	-	-	one	-	-	*"Table 3–26 " on page 101*
	None (DB15 terminal)	Multi-encoder terminal	-	-	-	-	-	-	one	one	*"Table 3–27 " on page 102*

Type	Mark	Terminal Name	Power Supply Unit Model (MD810-50M4TXXGXXX)								S1/S2 State
			G200	G201	G210	G211	G300	G400	G530	G531	
I/O terminal	CN1	DI/DO	one	one	one	one	one	one	one	one	*"Table 3–17 " on page 97*
	CN2	AI/AO terminal	one	one	one	one	one	one	one	one	*"Table 3–18 " on page 97*
	CN5	Relay terminal	one	one	one	one	one	one	one	one	*"Table 3–23 " on page 99*
STO terminal	CN4	STO terminal	-	-	-	-	-	-	Reserved	one	*"Table 3–22 " on page 99*
	STO	STO terminal	-	one	Reserved	one	Reserved	Reserved	-	-	
DIP switch	S1	S1 DIP switch	one	one	one	one	one	one	one	one	*"Table 3–30 " on page 104*
	S2	S2 DIP switch	one	one	one	one	one	one	one	one	*"Table 3–31 " on page 105*
Terminal layout											
/			Power Supply Unit Model (MD810-50M4TXXGXXX)								/
			G200	G201	G210	G211	G300	G400	G530	G531	
Terminal layout			*"Figure 3–16 " on page 93*	*"Figure 3–17 " on page 93*	*"Figure 3–18 " on page 94*	*"Figure 3–19 " on page 94*	*"Figure 3–20 " on page 95*	*"Figure 3–21 " on page 95*	*"Figure 3–22 " on page 96*	*"Figure 3–23 " on page 96*	-

Note

- "One" indicates that the model has one terminal of this type.
- "-" indicates that the model does not have the terminal of this type.
- “Reserved” indicates that the model has the terminal of this type without electrical connection.
- "Empty terminal" indicates that the position is reserved without the terminal or electrical connection.

3.5.2.2 Control Terminal Arrangement of the Drive Unit (Single-Axis)

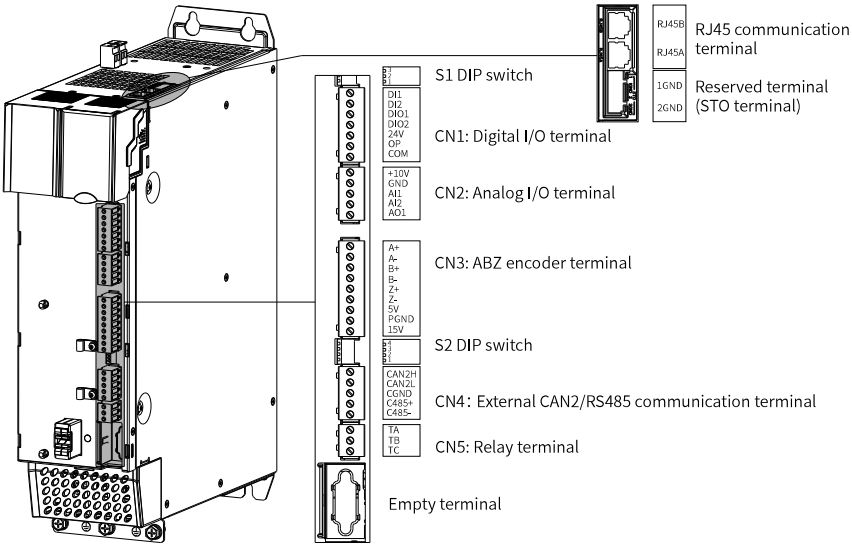

Figure 3-16 MD810-50M4TXXG200 control terminals

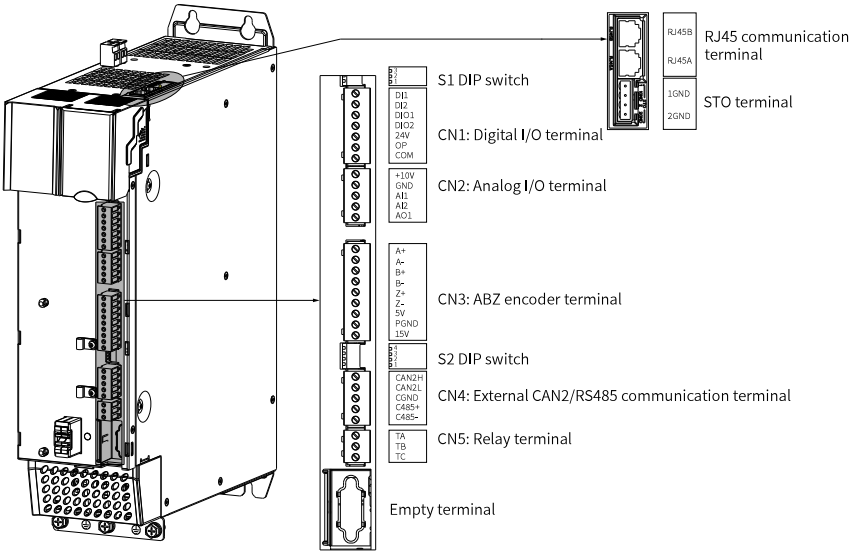

Figure 3-17 MD810-50M4TXXG201 control terminals

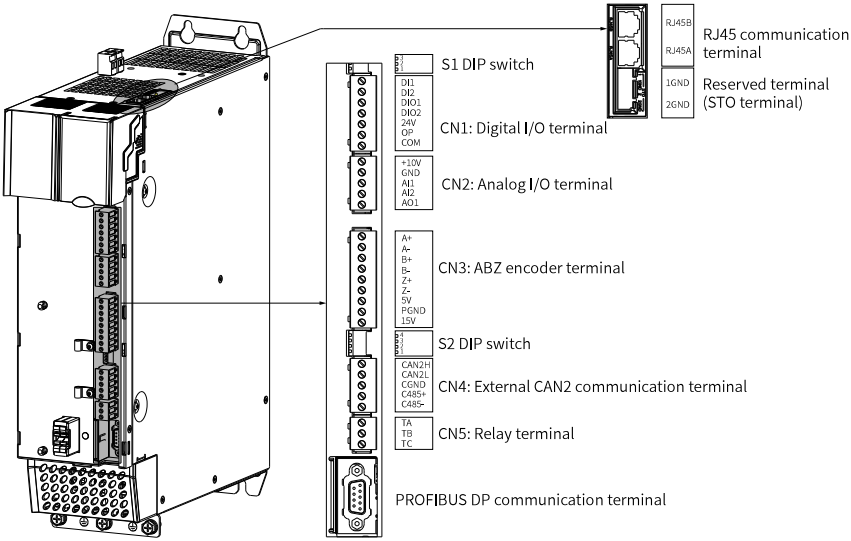

Figure 3-18 MD810-50M4TXXG210 control terminals

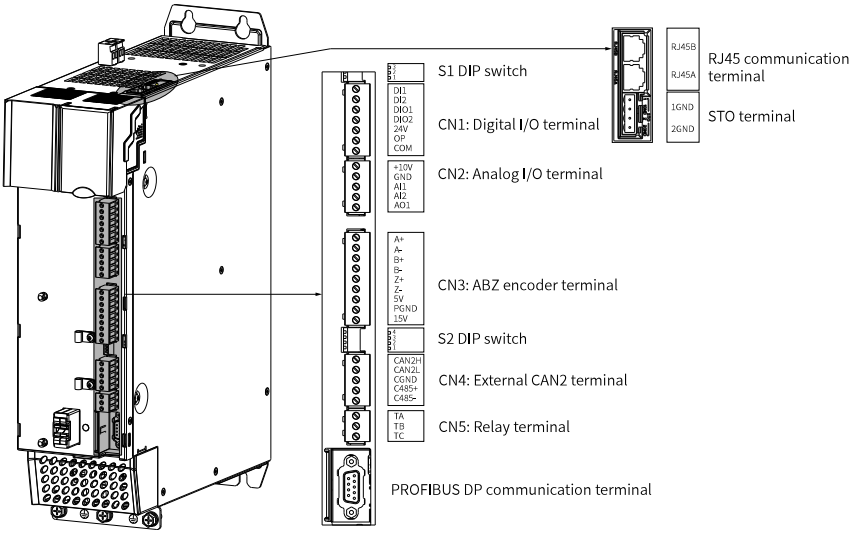

Figure 3-19 MD810-50M4TXXG211 control terminals

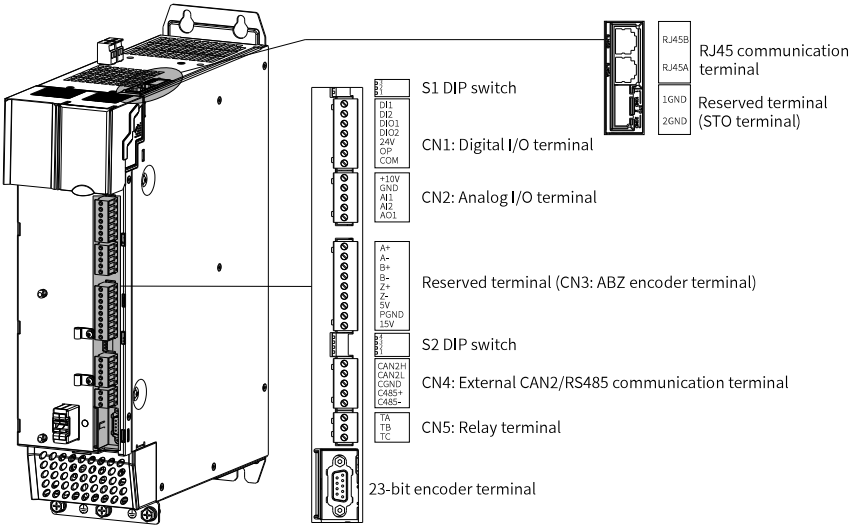

Figure 3-20 MD810-50M4TXXG300 control terminals

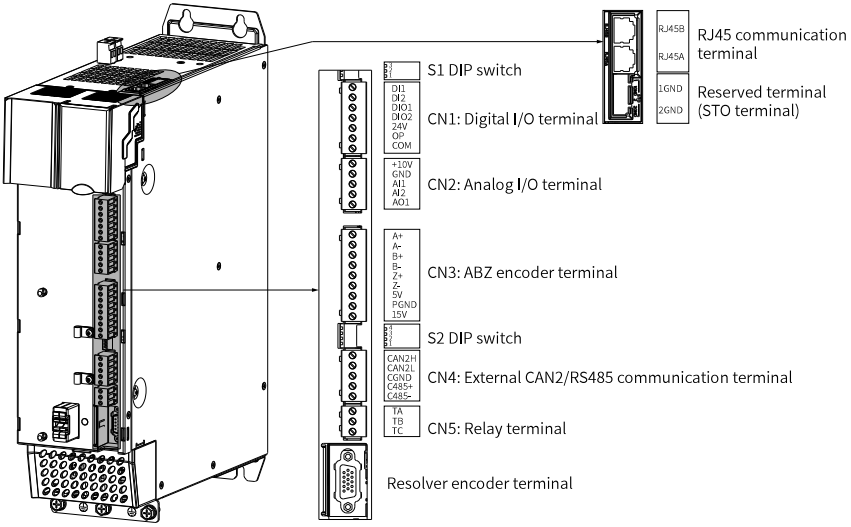

Figure 3-21 MD810-50M4TXXG400 control terminals

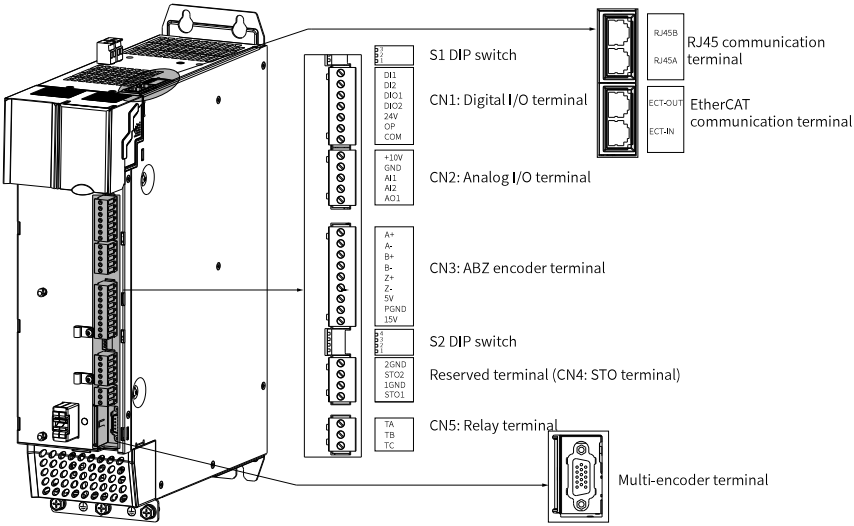

Figure 3-22 MD810-50M4TXXG530 control terminals

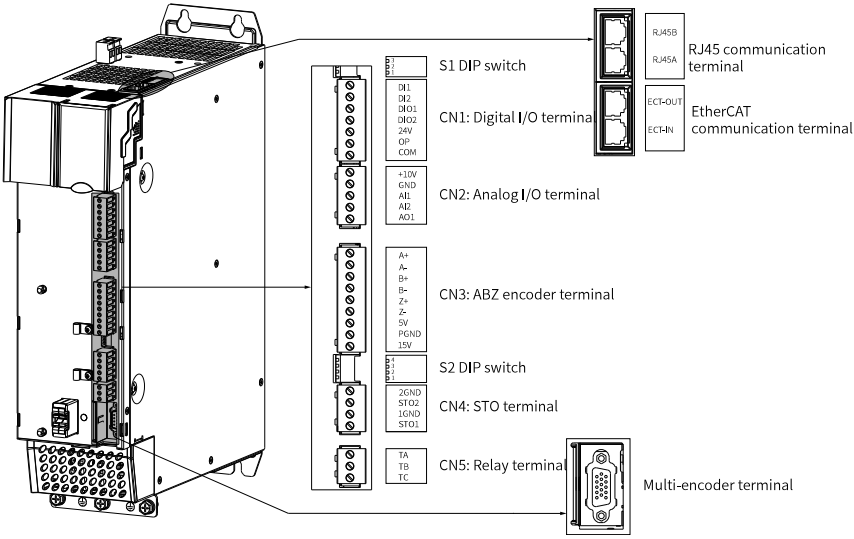

Figure 3-23 MD810-50M4TXXG531 control terminals

3.5.2.3 Descriptions of Control Terminals for the Drive Unit (Single-Axis)

Table 3–17 DI/DO terminals (CN1)

Pin Mark	Assignment	Performance
DI1-DI2	Common multi-function input terminal	Isolated sink/source input programmable terminal; input frequency: < 100 Hz
DIO1	High-speed pulse input terminal/Common multi-functional output terminal	Isolated programmable I/O terminal; maximum input frequency as DI: 100 kHz; maximum output capability as DO: 24 VDC/ 50 mA
DIO2	Common multi-functional input terminal/High-speed pulse output terminal	Isolated programmable I/O terminal; input frequency as DI: < 100 Hz; maximum output frequency as DO: 100 kHz; drive capability as DO: 24 VDC/50 mA
OP	Multi-functional input common terminal	Internally isolated from COM and 24V; shorted to 24V using a U-type jumper by default
24V	Internal 24 V power supply provided by the drive unit	24 V ± 10%; no-load voltage: ≤ 30 V; maximum output current: 200 mA; internally isolated from OP/CGND/GND
COM	Internal 24 V grounding terminal provided by the drive	Internally isolated from CGND and GND

Table 3–18 AI/AO terminals (CN2)

Pin Mark	Assignment	Performance
AI1	Analog single-ended input channel AI1	0 V to 10 V and -10 V to 10 V available; 12-bit resolution; correction accuracy error: ±0.3%; input impedance: 22.1 kΩ Temperature sensors PT100 and PT1000 (switched over by sub-switch 3 of DIP switch S1) are supported.
AI2	Analog single-ended input channel AI2	0 V to 10 V and 0 mA to 20 mA available; 12-bit resolution; correction accuracy error: ±0.3%; input impedance in voltage input mode: 22.1 kΩ; input impedance in current input mode: 500 Ω or 250 Ω
AO	Analog output	0 V to 10 V and 0 mA to 20 mA available; 12-bit resolution; correction accuracy error: ±0.5%; maximum load output current in voltage mode: 2 mA; load impedance in voltage mode: > 5 kΩ; load impedance in current mode: < 500 Ω

Pin Mark	Assignment	Performance
+10V	10 V analog voltage output	10 V ± 10%; maximum output current: 10 mA
GND	Analog ground	Internally isolated from COM and CGND

Table 3–19 ABZ encoder terminal (CN3)

Pin Mark	Assignment	Performance
A+	Differential encoder positive A signal	Differential, collector, and push-pull encoders are supported. Differential encoders are powered by 5 V power supply, and collector and push-pull encoders are powered by 15 V power supply. Sub-switch 4 of DIP switch S2 is used to switch between 5 V and 15 V.
A–	Differential encoder negative A signal/collector or push-pull encoder A signal	
B+	Differential encoder positive B signal	
B–	Differential encoder negative B signal/collector or push-pull encoder B signal	
Z+	Differential encoder positive Z signal	
Z-	Differential encoder negative Z signal/collector or push-pull encoder Z signal	
5V	Encoder power supply	
15V	Encoder power supply	
PGND	Encoder power supply ground	

Table 3–20 External CAN2 terminal

Pin Mark	Assignment	Performance
CAN2H	CAN_H signal of CAN communication	The internal CAN bus can be used as synchronous control among drive units after they are connected through the terminal.
CAN2L	CAN_L signal of CAN communication	
CGND	CAN communication signal ground	

Table 3–21 External CAN2/RS485 communication terminal CN4

Pin Mark	Assignment	Performance
C485+	External RS485 communication positive signal	Used to communicate with the host controller (such as PLC) based on RS485
C485-	External RS485 communication negative signal	
CAN2H	CAN_H signal of CAN communication	The internal CAN bus can be used as synchronous control among drive units after they are connected through the terminal.
CAN2L	CAN_L signal of CAN communication	
CGND	CAN communication signal ground	

Table 3–22 STO terminals CN4 and STO

Pin Mark	Assignment	Performance
STO1	STO channel 1 power supply+	24 V input
1GND	STO channel 1 power supply-	
STO2	STO channel 2 power supply+	
2GND	STO channel 2 power supply-	

Table 3–23 Relay terminal (CN5)

Pin Mark	Assignment	Performance
TA/TB/TC	TA-TB: Normally closed TA-TC: Normally open	Contact capacity: 250 VAC/3 A (COS∅=0.4)

Table 3–24 PROFIBUS DP communication terminal (DB9)

Pin Mark	Assignment	Performance
Not connected	/	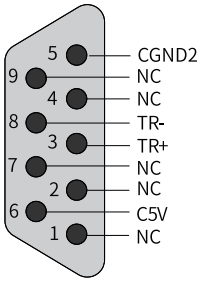
Not connected	/	
TR+	PROFIBUS DP bus positive end	
Not connected	/	
CGND2	PROFIBUS DP bus power supply ground	
C5V	PROFIBUS DP bus power supply	
Not connected	/	
TR-	PROFIBUS DP bus negative end	
Not connected	/	

Table 3–25 23-bit encoder terminal (DB9)

Pin Mark	Assignment	Performance
PS+	Bus communication signal+	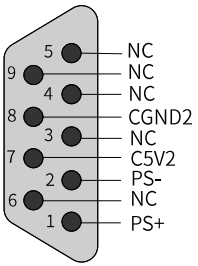
PS-	Bus communication signal-	
Not connected	/	
Not connected	/	
Not connected	/	
Not connected	/	
C5V2	Encoder +5 V power supply	Note that when the DB9 terminal is used as the 23-bit encoder terminal, the CN3 (ABZ encoder terminal) is invalid.
CGND2	Encoder +5 V power supply ground	
Not connected	/	

Table 3–26 Resolver encoder terminal (DB15)

Pin Mark	Assignment	Performance
EXC+	Excitation output signal+	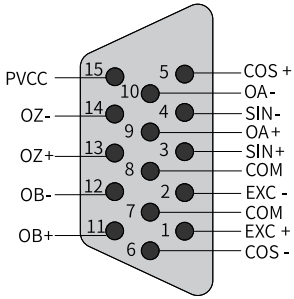
EXC-	Excitation output signal-	
SIN+	Feedback sine signal+	
SIN-	Feedback sine signal-	
COS+	Feedback cosine signal+	
COS-	Feedback cosine signal-	
COM	Power supply ground of the frequency division circuit	
COM	Power supply ground of the frequency division circuit	
OA+	Output positive A signal for frequency division	
OA-	Output negative A signal for frequency division	
OB+	Output positive B signal for frequency division	
OB-	Output negative B signal for frequency division	
OZ+	Output positive Z signal for frequency division	
OZ-	Output negative Z signal for frequency division	
PVCC	Power supply (5 V to 30 V) for the frequency division circuit	

Table 3–27 Multi-encoder terminal (DB15)

Pin Mark	Assignment	Performance
Z+/CLK+	Z-phase positive signal or SSI clock output positive signal for incremental or sin-cos encoders	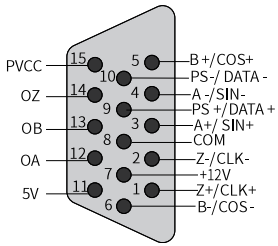 The multi-encoder terminal can be used to connect the 5 V differential ABZ, 23-bit communication, sine-cosine, and SSI encoders, and supports incremental frequency division output.
Z-/CLK-	Z-phase negative signal or SSI clock output signal signal for incremental and sine-cosine encoders	
A+/SIN+	A-phase positive signal or sine-cosine input positive signal for 5 V incremental encoders	
A-/SIN-	A-phase negative signal or sine-cosine input negative signal for 5 V incremental encoders	
B+/COS+	B-phase positive signal or sine-cosine input positive signal for 5 V incremental encoders	
B-/COS-	B-phase negative signal or cosine-cosine input negative signal for 5 V incremental encoders	
12V	12 V power supply of the encoder	
COM	Power supply ground for encoders	
PS+/DATA+	Communication positive signal or SSI data positive signal for Inovance 23-bit encoders	
PS-/DATA-	Communication negative signal or SSI data negative signal for Inovance 23-bit encoders	
5V	5 V power supply of the encoder	
OA	A-phase signal for frequency division output	
OB	B-phase signal for frequency division output	
OZ	C-phase signal for frequency division output	
PVCC	Power supply (5 V to 30 V) for the frequency division output	

Table 3–28 RJ45 communication terminals RJ45A/ RJ45B

Pin Mark			Assignment	Performance	
RJ45A	1	CAN1H	CAN_H signal of CAN communication	CANopen/ CANlink supported; used for communication with the host controller and internal commissioning	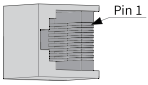
	2	CAN1L	CAN_L signal of CAN communication		
	3	CGND	Communication signal ground		
	4	RS485+	Positive RS485 communication signal	Internal bus, used only for the external operating panel and PC commissioning	
	5	RS485-	Negative RS485 communication signal		
	6	Not connected	/		
	7	Not connected	/		
	8	CGND	Communication signal ground		
RJ45B	1	CAN1H	CAN_H signal of CAN communication	CANopen/ CANlink supported; used for communication with the host controller and internal commissioning	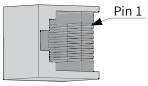
	2	CAN1L	CAN_L signal of CAN communication		
	3	CGND	Communication signal ground		
	4	RS485+	Positive RS485 communication signal	Internal bus, used only for the external operating panel and PC commissioning	
	5	RS485-	Negative RS485 communication signal		
	6	C7V	Used to power the external LCD operating panel	Power supply of the external LCD operating panel	
	7	C7V	Used to power the external LCD operating panel		
	8	CGND	Communication signal ground	Communication signal ground	

Table 3–29 EtherCAT communication terminals ECT-IN and ECT-OUT

Pin Mark		Assignment	Performance	
1	TX+	Data transmitting+	The yellow indicator indicates that the link has been established. The green indicator indicates that the signal is normal.	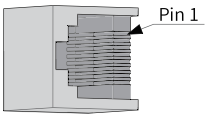
2	TX-	Data transmitting (-)		
3	RX+	Data receiving (+)		
6	RX-	Data receiving (-)		

Table 3–30 DIP switch S1

Terminal name	Function	DIP position
CAN1 termination resistor selection (during CAN communication through terminals RJ45A/RJ45B)	1 and 2 set to ON: Termination resistor enabled	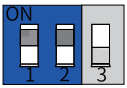
	Toggle positions 1 and 2 to OFF: Termination resistor not connected	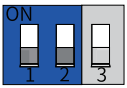
AI1 function selection	PT100/PT1000 temperature detection when switch 3 is turned on.	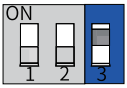
	3 set to OFF: analog input	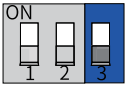

Table 3–31 DIP switch S2

Terminal name	Description	DIP position
C485 termination resistor (during RS485 communication through external CAN2/RS485 communication terminals marked by CN4)	1 and 2 set to ON: Termination resistor enabled	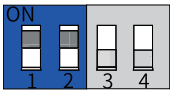
	Toggle positions 1 and 2 to OFF: Termination resistor not connected	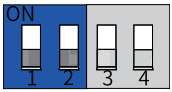
DIP switch for connecting the CAN2 termination resistor (during CAN communication through external CAN2/RS485 communication terminals marked by CN4)	3 set to ON: Termination resistor enabled	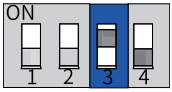
	3 set to OFF: Termination resistor disabled	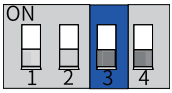
Power supply for the ABZ encoder terminal	5 V power supply when switch 4 is turned on.	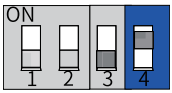
	15 V power supply when switch 4 is turned off.	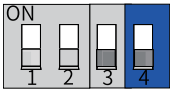

3.5.3 Layout and Description of Control Terminals for the Drive Unit (Dual-Axis)

3.5.3.1 Relationship Between Drive Unit (Dual-axis) Models and Control Terminals

Type	Mark	Terminal Name	Power Supply Unit Model (MD810-50M4TDXXGXXX)					Terminal Assignment
			G200	G201	G210	G211	G300	
Communication terminal	CN4	External CAN2/RS485 communication terminal	-	-	-	-	one	*"Table 3–35 " on page 113*
	CN6	External CAN2/RS485 communication terminal	one	one	-	-	-	
	RJ45A/ RJ45B	RJ45 communication terminal	one	one	one	one	one	*"Table 3–39 " on page 115*
	None (DB9)	PROFIBUS DP communication terminal	-	-	one	one	-	*"Table 3–37 " on page 114*
Encoder terminal	CN2	ABZ encoder terminal for axis 1	one	one	one	one	-	*"Table 3–33 " on page 112*
	CN4	ABZ encoder terminal for axis 2	one	one	one	one	-	
	None (DB9)	23-bit encoder terminal	-	-	-	-	two	*"Table 3–38 " on page 114*
I/O terminal	CN1	Common terminal and axis 1 analog/ digital I/O terminal	one	one	one	one	one	*"Table 3–32 " on page 111*
	CN3	Analog/ digital I/O terminal for axis 2	one	one	one	one	one	*"Table 3–34 " on page 113*
	CN5	Relay terminal	one	one	one	one	one	*"Table 3–36 " on page 113*

Type	Mark	Terminal Name	Power Supply Unit Model (MD810-50M4TDXXGXXX)					Terminal Assignment
			G200	G201	G210	G211	G300	
STO terminal	STO	Axis 1 STO terminal, axis 2 STO terminal	Reserved	one	Reserved	one	-	*"Table 3–40 " on page 116*
DIP switch	S1	S1 DIP switch	one	one	one	one	one	*"Table 3–41 " on page 116*
	S2	S2 DIP switch	one	one	-	-	one	*"Table 3–42 " on page 116*
Terminal layout								
/			Power Supply Unit Model (MD810-50M4TDXXGXXX)					/
			G200	G201	G210	G211	G300	
Terminal layout			*"Figure 3–24 " on page 108*	*"Figure 3–25 " on page 109*	*"Figure 3–26 " on page 109*	*"Figure 3–27 " on page 110*	*"Figure 3–28 " on page 111*	-

Note

- "One" indicates that the model has one terminal of this type.
- "Two" indicates that the model has two terminals of this type.
- "-" indicates that the model does not have the terminal of this type.
- “Reserved” indicates that the model has the terminal of this type without electrical connection.
- "Empty terminal" indicates that the position is reserved without the terminal or electrical connection.

3.5.3.2 Control Terminal Arrangement of the Drive Unit (Dual-Axis)

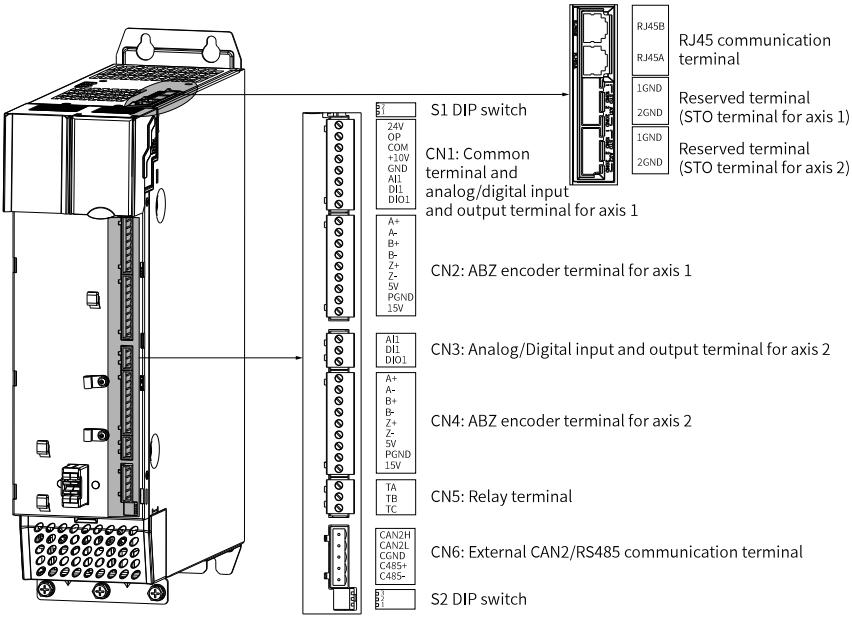

Figure 3-24 MD810-50M4TDXXG200 control terminals

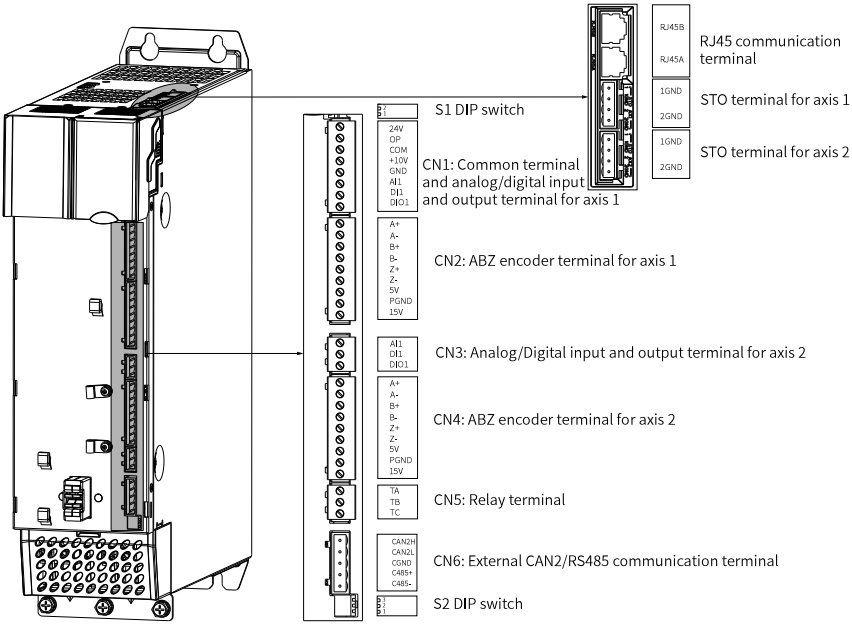

Figure 3-25 MD810-50M4TDXXG201 control terminals

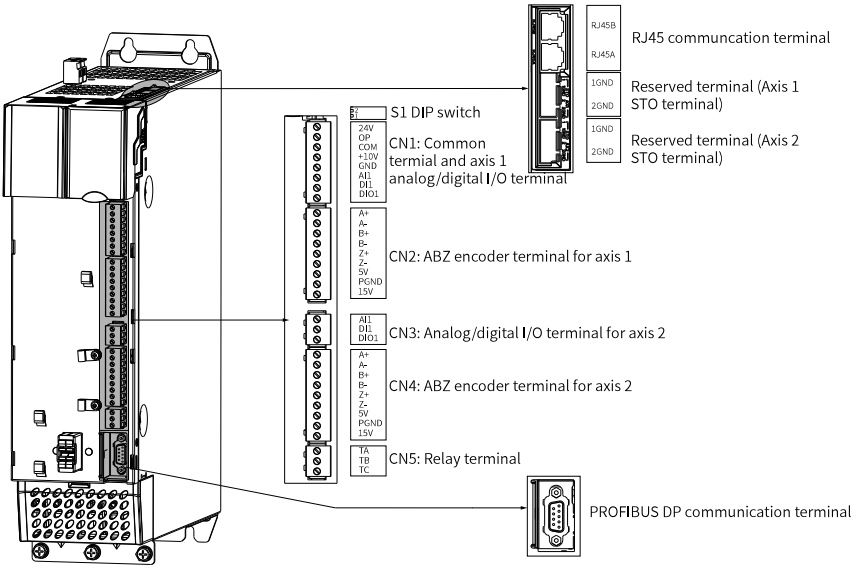

Figure 3-26 MD810-50M4TDXXG210 control terminals

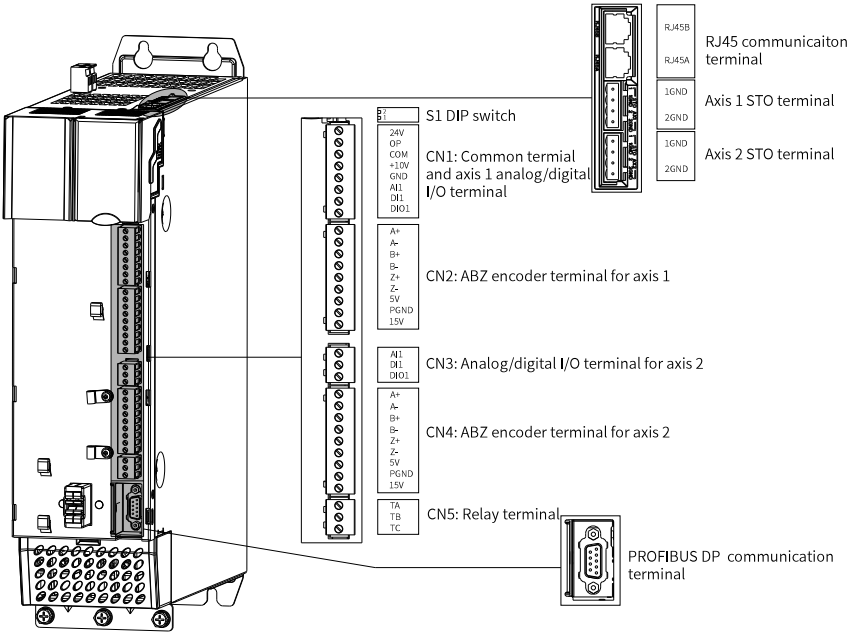

Figure 3-27 MD810-50M4TDXXG211 control terminals

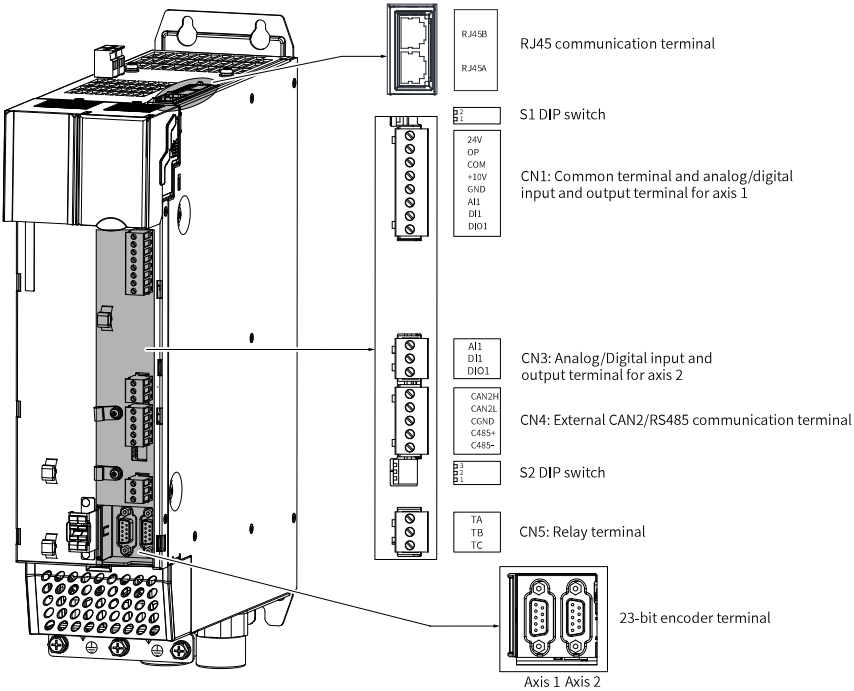

Figure 3-28 MD810-50M4TDXXG300 control terminals

3.5.3.3 Descriptions of Control Terminals for the Drive Unit (Dual-Axis)

Table 3–32 Common terminal and axis 1 analog/digital I/O terminal (CN1)

Pin Mark	Assignment	Performance
24V	Internal 24 V power supply provided by the drive unit	24 V ± 10%; no-load voltage: ⩽ 30 V; maximum output current: 200 mA; internally isolated from OP/CGND/GND
OP	Multi-functional input common terminal	Internally isolated from COM and 24V; shorted to 24V using a U-type jumper by default
COM	Internal 24 V grounding terminal provided by the drive	Internally isolated from CGND and GND
+10V	10 V analog voltage output	10 V ± 10%; maximum output current: 10 mA
GND	Analog ground	Internally isolated from COM and CGND

Pin Mark	Assignment	Performance
AI1	Analog single-ended input channel AI1	0 V to 10 V, -10 V to +10 V, and 0 mA to 20 mA available; 12-bit resolution, correction accuracy error: ±3%; input impedance in voltage mode: 22.1 k; input impedance in current mode: 250 Ω or 500 Ω Temperature sensors PT100 and PT1000 (F9-56) are supported.
DI1	Common multi-function input terminal	Isolated sink/source input programmable terminal; input frequency: < 100 Hz
DIO1	High-speed pulse input terminal/Common multi-functional output terminal	Isolated programmable I/O terminal; maximum input frequency as DI: 100 kHz; maximum output capability as DO: 24 VDC/ 50 mA

Table 3–33 Axis 1 ABZ encoder terminal (CN2) and axis 2 ABZ encoder terminal (CN4)

Pin Mark	Assignment	Performance
A+	Differential encoder positive A signal	Differential, collector, and push-pull encoders are supported. Differential encoders are powered by 5 V power supply, and collector and push-pull encoders are powered by 15 V power supply. F1-25 is used to switch between 5 V and 15 V.
A–	Differential encoder negative A signal/ collector or push-pull encoder A signal	
B+	Differential encoder positive B signal	
B–	Differential encoder negative B signal/ collector or push-pull encoder B signal	
Z+	Differential encoder positive Z signal	
Z-	Differential encoder negative Z signal/ collector or push-pull encoder Z signal	
5V	Encoder power supply	
15V	Encoder power supply	
PGND	Encoder power supply ground	

Table 3–34 Axis 2 analog/digital I/O terminal (CN3)

Pin Mark	Assignment	Performance
AI1	Analog single-ended input channel AI1	0 V to 10 V, -10 V to +10 V, and 0 mA to 20 mA available; 12-bit resolution, correction accuracy error: ±3%; input impedance in voltage mode: 22.1 k; input impedance in current mode: 250 Ω or 500 Ω Temperature sensors PT100 and PT1000 (F9-56) are supported.
DI1	Common multi-function input terminal	Isolated sink/source input programmable terminal; input frequency: < 100 Hz
DIO1	High-speed pulse input terminal/Common multi-functional output terminal	Isolated programmable I/O terminal; maximum input frequency as DI: 100 kHz; maximum output capability as DO: 24 VDC/ 50 mA

Table 3–35 External CAN2/RS485 communication terminals CN4 and CN6

Pin Mark	Assignment	Performance
C485+	External RS485 communication positive signal	Used to communicate with the host controller (such as PLC) based on RS485
C485-	External RS485 communication negative signal	
CAN2H	CAN_H signal of CAN communication	The internal CAN bus can be used as synchronous control among drive units after they are connected through the terminal.
CAN2L	CAN_L signal of CAN communication	
CGND	CAN communication signal ground	

Table 3–36 Relay terminal (CN5)

Pin Mark	Assignment	Performance
TA/TB/TC	TA-TB: Normally closed TA-TC: Normally open Shared by axis 1 and axis 2	Contact capacity: 250 VAC / 3 A (COSØ=0.4)

Table 3–37 PROFIBUS DP communication terminal (DB9)

Pin Mark	Assignment	Performance
Unconnected	/	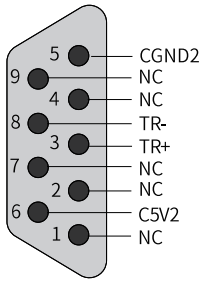
Unconnected	/	
TR+	PROFIBUS DP bus positive end	
Unconnected	/	
CGND2	PROFIBUS DP bus power supply ground	
C5V2	PROFIBUS DP bus power supply	
Unconnected	/	
TR-	PROFIBUS DP bus negative end	
Unconnected	/	

Table 3–38 23-bit encoder terminal (DB9)

Pin Mark	Assignment	Performance
PS+	Bus communication signal+	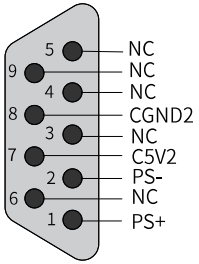
PS-	Bus communication signal-	
Unconnected	/	
Unconnected	/	
Unconnected	/	
Unconnected	/	
+5 V	Encoder +5 V power supply	
GND	Encoder +5 V power supply ground	
Unconnected	/	Note that when the DB9 terminal is used as the 23-bit encoder terminal, CN2 (axis 1 ABZ encoder terminal) and CN4 (axis 2 ABZ encoder terminal) are invalid.

Table 3–39 RJ45 communication terminals RJ45A/ RJ45B

Pin Mark			Assignment	Performance	
RJ45A	1	CAN1H	CAN_H signal of CAN communication	CANopen/ CANlink supported; used for communication with the host controller and internal commissioning	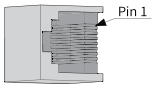
	2	CAN1L	CAN_L signal of CAN communication		
	3	CGND	Communication signal ground		
	4	485-	RS485 communication signal (+)	Internal bus, used only for the external operating panel and PC commissioning	
	5	485-	RS485 communication signal (-)		
	6	Unconnected	/		
	7	Unconnected	/		
	8	CGND	Communication signal ground		
RJ45B	1	CAN1H	CAN_H signal of CAN communication	CANopen/ CANlink supported; used for communication with the host controller and internal commissioning	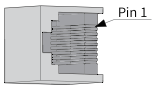
	2	CAN1L	CAN_L signal of CAN communication		
	3	CGND	Communication signal ground		
	4	485-	RS485 communication signal (+)	Internal bus, used only for the external operating panel and PC commissioning	
	5	485-	RS485 communication signal (-)		
	6	C7V	Used to power the external LCD operating panel	Power supply of the external LCD operating panel	
	7	C7V	Used to power the external LCD operating panel		
	8	CGND	Communication signal ground	Communication signal ground	

Table 3–40 Axis 1 STO terminal and axis 2 STO terminal

Pin Mark	Assignment	Performance
STO1	STO channel 1 power supply+	24 V input power supply
1GND	STO channel 1 power supply-	
STO2	STO channel 2 power supply+	
2GND	STO channel 2 power supply-	

Table 3–41 DIP switch S1

Terminal Name	Function	DIP position
CAN1 termination resistor selection (during CAN communication through terminals RJ45A/ RJ45B)	Toggle positions 1 and 2 to ON: Termination resistor connected	
	Toggle positions 1 and 2 to OFF: Termination resistor not connected	

Table 3–42 DIP switch S2

Terminal Name	Function	DIP position
C485 termination resistor (during RS485 communication through external CAN2/RS485 communication terminals marked by CN4)	Toggle positions 1 and 2 to ON: Termination resistor connected	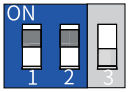
	Toggle positions 1 and 2 to OFF: Termination resistor not connected	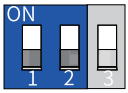
DIP switch for connecting the CAN2 termination resistor (during CAN communication through external CAN2/ RS485 communication terminals marked by CN4)	3 set to ON: Termination resistor enabled	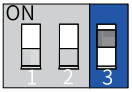
	3 set to OFF: Termination resistor disabled	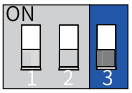

3.6 Cable Selection and Wiring Requirements for Control Circuits

Control circuit cable selection

- All control circuit cables must be shielded cables.
- It is recommended that digital signal cables use shielded twisted pair (STP) cables.

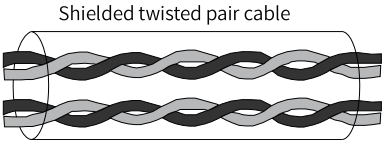

Figure 3-29 Shielded twisted pair cables

Control circuit wiring

- The motor cables must be laid far away from all control cables.
- Route the motor cable, the input power cable, and the control circuit cable through different routes. Avoid long-distant parallel routing of the motor cable and control circuit cable, thereby reducing electromagnetic interference caused by coupling.
- If intersection of the control circuit cable and the drive cable is necessary, ensure that the angle is 90°.

The following figure shows the recommended cabling.

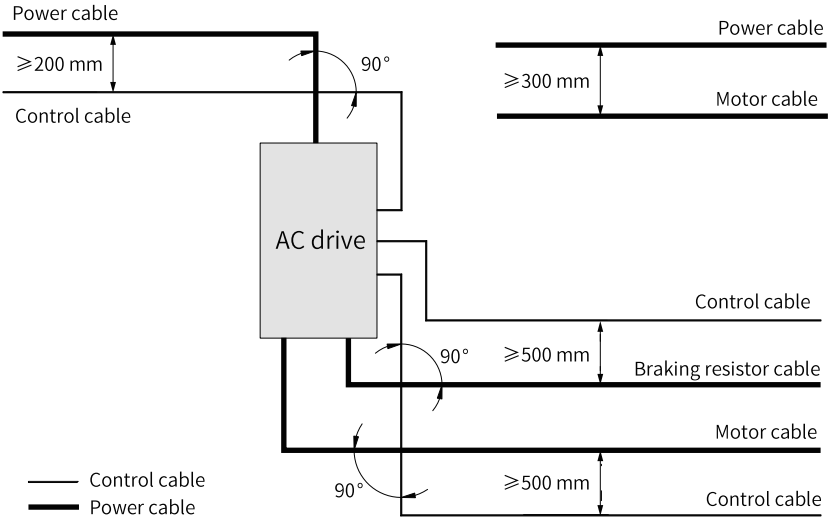

Figure 3-30 Recommended cabling

3.7 Wiring of I/O Signal Terminals

3.7.1 Wiring the DI

The DI can be wired in the sink (NPN) and source (PNP) mode.

Sink wiring

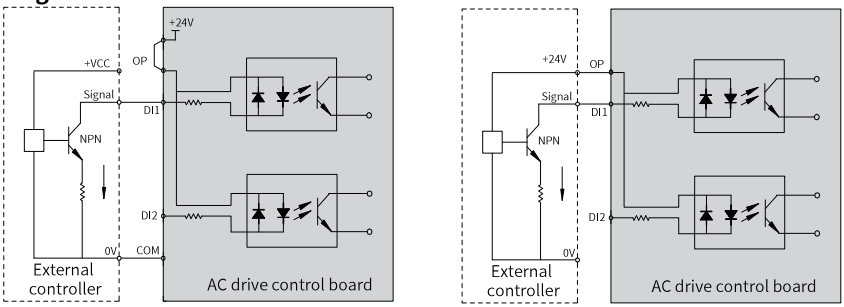

Sink wiring mode when the internal 24 V power supply of the AC drive is used

Sink wiring mode when the external 24 V power supply is used

Figure 3-31 Sink wiring

- The internal 24 V power supply of the AC drive is the most commonly wiring method. In the sink wiring mode, short the OP and 24V terminals of the AC drive, and connect the COM terminal of the AC drive to the 0 V terminal of the external controller, as shown in the following figure.
- To use the external 24 V power supply, remove the jumper on the +24V and OP terminals of the AC drive, connect the positive electrode of the external 24 V power supply to the OP terminal of the AC drive, and connect the external 0 V power supply to the DI through the external controller contact or switch.

The following figure shows parallel connection of DIs of multiple drives in the sink mode.

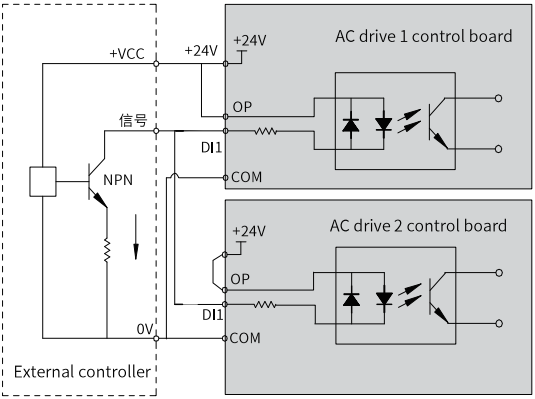

Figure 3-32 Parallel connection of DIs of multiple drives in the sink mode

Source wiring

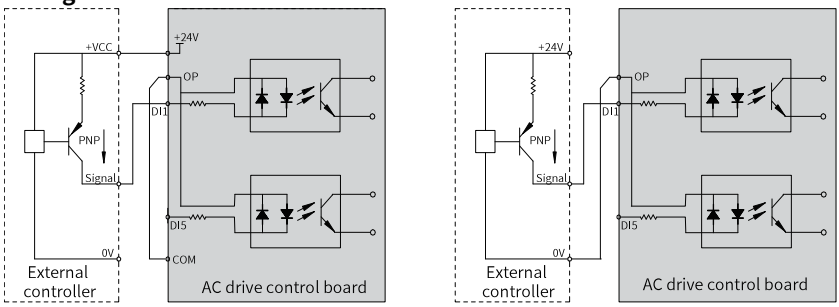

Source wiring mode when the internal 24 V power supply of the AC drive is used

Source wiring mode when the external 24 V power supply is used

Figure 3-33 Source wiring

- To use the internal 24 V power supply of the AC drive, remove the jumper on the +24V terminal and the OP terminal of the AC drive, connect the OP terminal and the COM terminal, and connect the +24V terminal of the AC drive to the common terminal of the external controller.
- To use the external 24 V power supply, remove the jumper on the +24V terminal and the OP terminal of the AC drive, connect the OP terminal of the AC drive to the external 0 V power supply, and connect the positive electrode of the external 24 V power supply to the DI through the external controller contact or switch.

3.7.2 Wiring the DIO1 and DIO2

DIO1 and DIO2 can be used as the DI or the DO, which is determined by F4-41. By default, DIO1 and DIO2 are used as the DI.

Caution

DIO1 and DIO2 can be used as either the DI or the DO at the same time.

- When DIO1 and DIO2 are used as the DI, the wiring method is the same as that of DI1 and DI2.
- When DIO1 and DIO2 are used as the DO, the DO common terminal is COM and only the sink wiring mode is supported, as shown in the following figure. If the DI common terminal OP of the DIO1 and DIO2 is connected to COM and the DIO1 and DIO2 has no output, the user equipment will receive the input signal by mistake. To avoid this situation, connect the DI common terminal OP of the DIO1 and DIO2 to 24V.

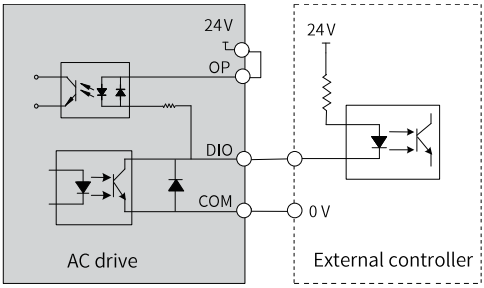

Figure 3-34 Wiring of the DIO terminal used as the DO

3.7.3 Wiring the AI

AI1 wiring

AI1 supports voltage input or current input. Switch the input source through F4–40. To enable AI1 to be used for temperature sensor input, set sub-switch 3 of DIP switch S1 to "ON", switch AI1 from the analog circuit to the PT100/PT1000 temperature sensor detection circuit, and set F9-56 to the corresponding sensor.

Weak analog voltage signals are prone to suffer external interference. Therefore, use shielded cables and ensure that the cable length is no longer than 20 m (as short as possible), as shown in *"Figure 3–35 " on page 121* and *"Figure 3–36 " on page 121* . In scenarios where analog signals experience severe external interference, install a filter capacitor or a ferrite core on the analog signal source, as shown in *"Figure 3–37 " on page 122* .

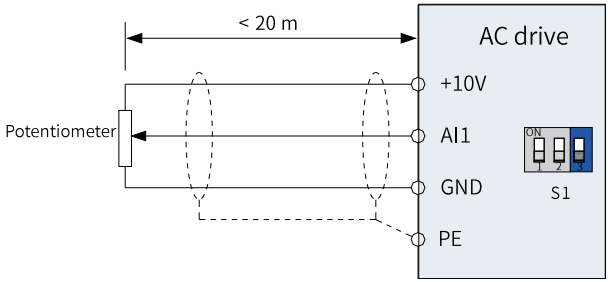

Figure 3-35 Wiring when AI1 used for analog input

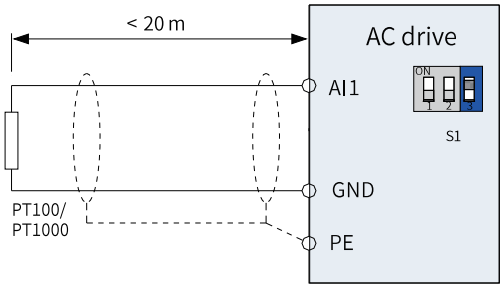

Figure 3-36 Wiring when AI1 used for temperature sensor input

Connect the lead wire of the AI shield to the PE terminal of the AC drive.

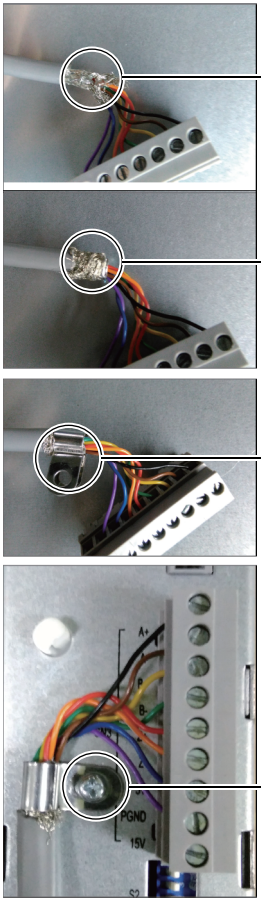

1. Cut the surface of the shielded cable to expose the shield.
2. Fold the shielded cable outwards to thicken and strengthen the shield.
3. Fix the shield by using the grounding cable clip.
4. Fix the grounding cable clip to the grounding terminal by the screw delivered with the product or the M3 x 8 screw.

Figure 3-37 Grounding the shield of the AI terminal

Wiring of AI2

AI2 supports 0 V to 10 V input and 0 mA to 20 mA input.

- When F4-40 is set to 0, AI2 adopts the voltage input mode. The wiring description of AI2 is the same as that of AI1.
- When F4-40 is set 1, AI2 adopts the current input mode with the input impedance of 500 Ω. The current flows to AI2 and flows from GND.

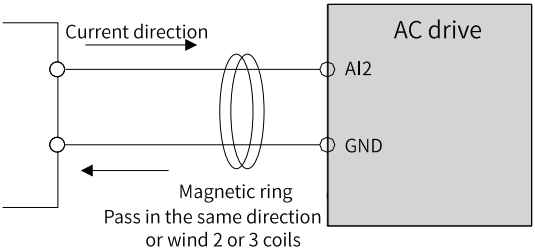

Figure 3-38 Wiring AI2

3.7.4 Wiring the AO

The AO supports 0 V to 10 V and 0 mA to 20 mA output, which can be selected by F5-23 (AO mode selection).

- When the AO adopts the voltage output mode, set F5-23 to 0. In this case, the load resistance must be larger than or equal to 5 kΩ, and the driving current must be smaller than 2 mA.
- When the AO adopts the current output mode, set F5-23 to 1. In this case, the load resistance must be smaller than or equal to 500 Ω; otherwise, the linearity of the AO output will be distorted.

To avoid external interference to the analog voltage signal, use shielded cables, and ensure that the wiring distance does not exceed 20 m, as shown in the figure below. In applications where the analog signal suffers severe interference, install a filter capacitor or ferrite magnetic core at the analog signal source side.

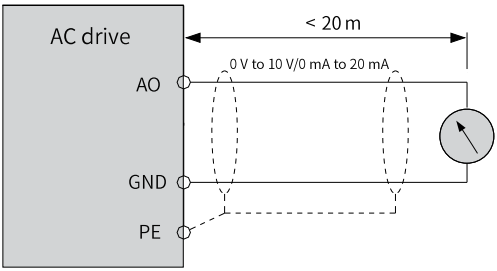

Figure 3-39 Wiring the AO

3.7.5 Relay Output Terminals

The inductive load (relay, contactor, and motor) causes voltage peak after the current is removed. Therefore, use a voltage dependent resistor (VDR) at the relay contact for protection and absorption circuits such as VDRs, RC absorption circuits, and diodes on the inductive load to ensure minimum interference during cutoff.

- When a contactor and an intermediate relay are connected to 220 VAC, parallel a VDR with a withstand voltage higher than 275 VAC at both ends of the drive coil of the contactor and the intermediate relay.
- When a contactor and an intermediate relay are connected to 24 VDC, inversely parallel a freewheeling diode at both ends of the drive coil of the contactor and intermediate relay, that is, the cathode and anode of the freewheeling diode are connected to the 24 V side and non-24 V side of the drive coil, respectively.

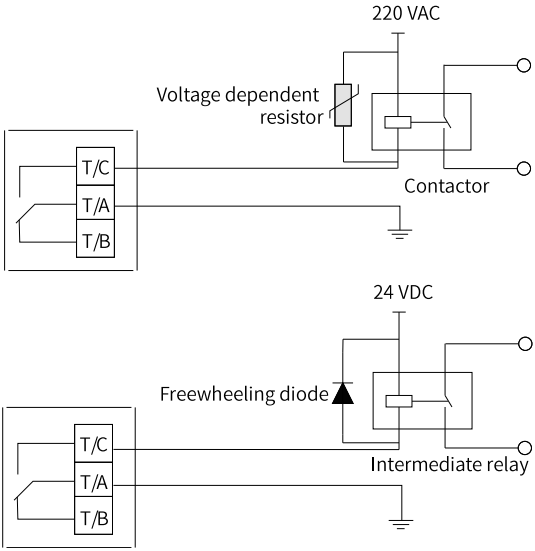

Figure 3-40 Anti-interference treatment for relay output terminals

Warning

- The relay will be connected to 220 V upon output. Do not wrongly connect to the surrounding safety extra-low voltage circuit terminal. The cable must meet the requirements of reinforced insulation.
- The external 220 V power supply of the relay must be used in an overvoltage class II (OVCII) environment.
- Changes of relay output are invalid without connection to the high-voltage power supply.

3.8 Communication Connection

3.8.1 RS485 Communication Connection

Product models and communication terminals

The power supply unit and the drive unit communicate with the PLC through the external CAN2/RS485 communication terminals (CN2 for the power supply unit and CN4 or CN6 for the drive unit). The following table describes the power supply unit models and the drive unit models that can communicate with the PLC based on the RS485 protocol and the communication terminals.

Terminal Mark	Terminal Name	Power Supply Unit Model (MD810-20M4TXXGXXX)		Terminal Assignment
		G000, G100	G020, G120	
CN2	External CAN2/RS485 communication terminal	one	one	*"Table 3–9 " on page 86*

Terminal Mark	Terminal Name	Drive Unit (Single-axis) Model (MD810-50M4TXXGXXX)						Terminal Assignment
		G200	G201	G210	G211	G300	G400	
CN4	External CAN2/RS485 communication terminal	one	one	one	one	one	one	*"Table 3–20 " on page 98*

Terminal Mark	Terminal Name	Drive Unit (Dual-axis) Model (MD810-50M4TDXXGXXX)			S1/S2 State
		G200	G201	G300	
CN4	External CAN2/RS485 communication terminal	-	-	one	*"Table 3–35 " on page 113*
CN6	External CAN2/RS485 communication terminal	one	one	-	

Note

- "One" indicates that the model has one terminal of this type.
- "-" indicates that the model does not have the terminal of this type.

Network topology

- The power supply unit and the drive unit communicate with the PLC through the external CAN2/RS485 communication terminals (CN2 for the power supply unit and CN4 or CN6 for the drive unit).
- The power supply unit and the drive unit function as the slave, and the PLC as the master.

- It is recommended that RS485 bus use the shielded twisted pair (STP) cables. Connect the reference ground of RS485 signals for all nodes, and connect the 120 Ω termination resistor at both ends of the bus to prevent signal reflection. A maximum of 128 nodes can be connected, and the distance between two nodes must be shorter than 3 m.

The following figure describes the RS485 bus connection.

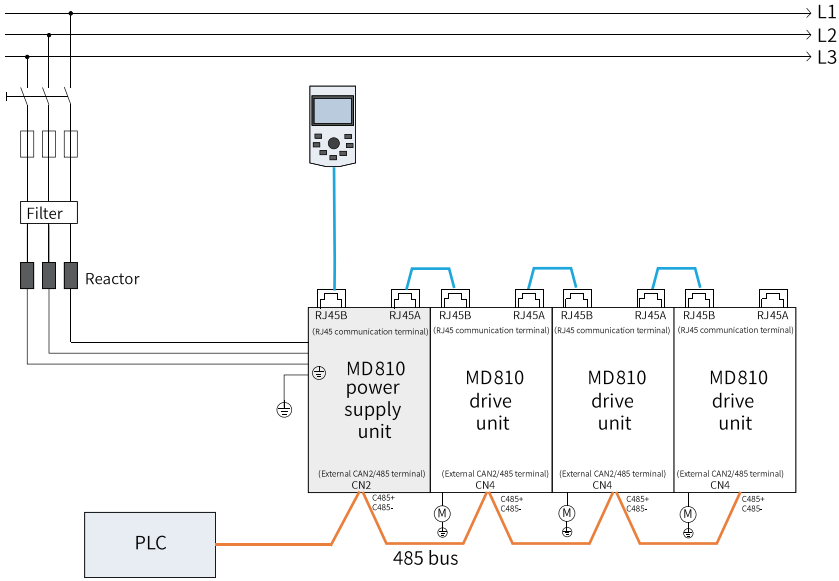

Figure 3-41 RS485 bus connection

Transmission distance

The following table describes the maximum number of nodes and the maximum transmission distance supported at different baud rates.

Transmission Distance (m)	Baud Rate (kbps)	Number of Nodes	Cable Specification
1000	19.2	Without repeater: < 32; with repeater: 128 at most	AWG26
100	115.2	Without repeater: < 32; with repeater: 128 at most	AWG26

Termination resistor

Table 3–43 Settings of termination resistors for the power supply unit

Mark	Function		DIP position
DIP switch S1	RS485 termination resistor (during RS485 communication through terminals RJ45A/RJ45B)	Toggle positions 1 and 2 to ON: Termination resistor connected	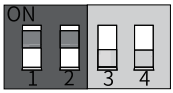
		Toggle positions 1 and 2 to OFF: Termination resistor not connected	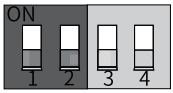
DIP switch S2	C485 termination resistor (during RS485 communication through external CAN2/ RS485 communication terminals marked by CN2)	Toggle positions 1 and 2 to ON: Termination resistor connected	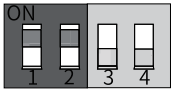
		Toggle positions 1 and 2 to OFF: Termination resistor not connected	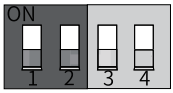

Table 3–44 Settings of termination resistors for the drive unit (single-axis)

Mark	Function		DIP position
DIP switch S2	C485 termination resistor (during RS485 communication through external CAN2/RS485 communication terminals marked by CN4)	Toggle positions 1 and 2 to ON: Termination resistor connected	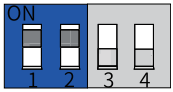
		Toggle positions 1 and 2 to OFF: Termination resistor not connected	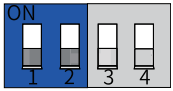

Table 3–45 Settings of termination resistors for the drive unit (dual-axis)

Mark	Function		DIP position
DIP switch S2	C485 termination resistor (during RS485 communication through external CAN2/ RS485 communication terminals marked by CN4)	Toggle positions 1 and 2 to ON: Termination resistor connected	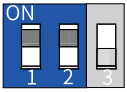
		Toggle positions 1 and 2 to OFF: Termination resistor not connected	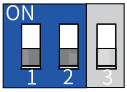

3.8.2 CAN Communication Connection

Product models and communication terminals

For MD810 series AC drive, the power supply unit and drive units can communicate with the PLC.

The power supply unit and the drive unit communicate with the PLC through the CAN communication terminal.

- The power supply unit communicates with the PLC through CAN1 communication terminal (CN1) and RJ45 communication terminals (RJ45/RJ45B).
- The drive units communicate with the PLC through RJ45 communication terminals (RJ45A/RJ45B).

The following table describes the power supply unit models and the drive unit models that can communicate with the PLC based on the CAN protocol and the corresponding communication terminals.

Mark	Name	Power Supply Unit Model (MD810-20M4TXXGXXX)			S1/S2 State
		G000, G100	G010, G110	G020, G120	
CN1	CAN1 (communication terminal)	one	one	one	*"Table 3–8 " on page 86*
RJ45A/ RJ45B	RJ45 communication terminal	one	one	one	*"Table 3–13 " on page 88*

Type	Name	Drive Unit (Single-axis) Model (MD810-50M4TXXGXXX)							Terminal Assignment
		G200	G201	G210	G300	G400	G530	G531	
RJ45 A/ RJ45 B	RJ45 communication terminal	one	one	one	one	one	one	one	*"Table 3–27 " on page 102*

Type	Name	Drive Unit (Dual-axis) Model (MD810-50M4TDXXGXXX)					S1/S2 state
		G200	G201	G210	G211	G300	
RJ45A/ RJ45B	RJ45 communication terminal	one	one	one	one	one	*"Table 3–39 " on page 115*

Note

"One" indicates that the model has one communication terminal of this type.

Network topology

CAN communication bus connection is described as follows:

- The power supply unit and the drive unit communicate with the PLC through the corresponding communication terminals (CN1 and RJ45A/RJ45B for the power supply unit and RJ45A/ RJ45B for the drive unit).
- The power supply unit and the drive unit function as the slave, and the PLC as the master.
- The AC drive can be commissioned through the external operating panel and the RJ45 terminals RJ45A and RJ45B.

To facilitate wiring, install the power supply unit at the ends (left end or right end) of the CAN bus. CAN communication bus connection is described in the figure below.

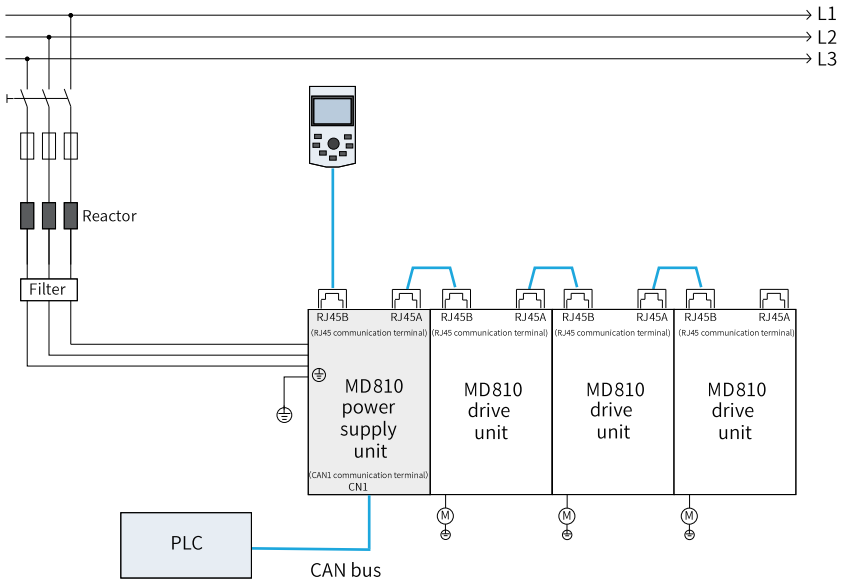

Figure 3-42 CAN communication bus connection (with the power supply unit installed at the ends of the CAN bus)

Note

The CAN1 communication terminal of the power supply unit and RJ45 terminal are internally connected.

If the power supply unit is in the middle of the CAN bus, do not connect to the PLC through the CAN connection terminal of the power supply unit. Instead, connect to the PLC through the RJ45 communication terminal of the drive unit at the start or end of the CAN bus. The following figure describes the CAN bus connection.

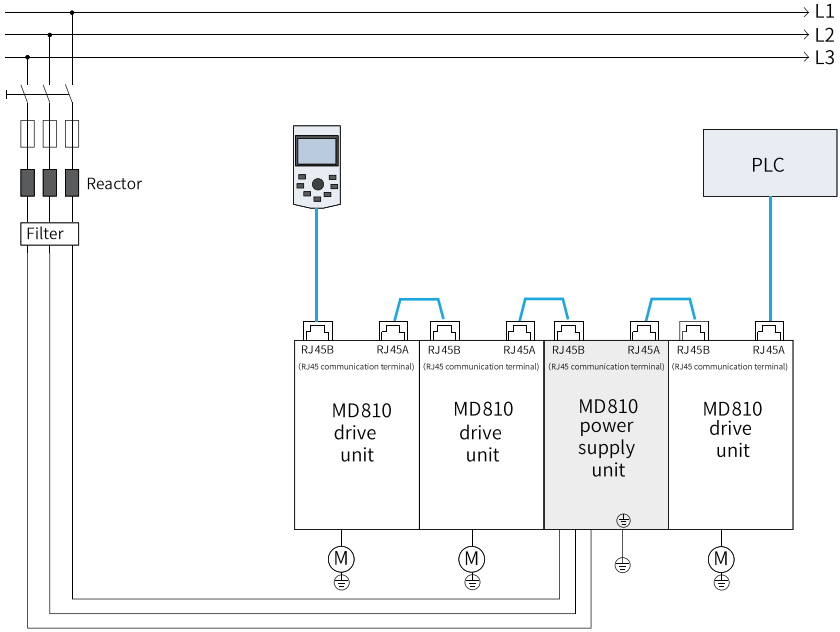

Figure 3-43 CAN communication bus connection (with the power supply unit installed at the middle of the CAN bus)

Transmission distance

The following table describes the maximum number of nodes and transmission distance supported at different baud rates.

Baud Rate (bps)	Max. Number of Nodes	Length (m)
1M	127	25
500k	127	100
250k	127	250
125k	127	500
100k	127	500
50k	127	1000
20k	127	1000

Termination resistor

Table 3–46 Settings of termination resistors for the power supply unit

Mark	Function		DIP position
DIP switch S1	CAN1 termination resistor selection (during CAN communication through terminals RJ45A/RJ45B)	3 and 4 set to ON: Termination resistor enabled	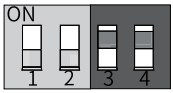
		Toggle positions 3 and 4 to OFF: Termination resistor not connected	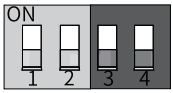
DIP switch S2	CAN2 termination resistor (during CAN communication through external CAN2/ RS485 communication terminals marked by CN2)	Toggle positions 3 and 4 to ON: Termination resistor connected	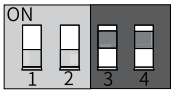
		Toggle positions 3 and 4 to OFF: Termination resistor not connected	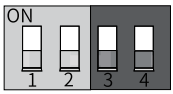

Table 3–47 Settings of termination resistors for the drive unit (single-axis)

Mark	Function		DIP position
DIP switch S1	CAN1 termination resistor selection (during CAN communication through terminals RJ45A/RJ45B)	1 and 2 set to ON: Termination resistor enabled	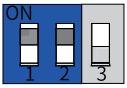
		Toggle positions 1 and 2 to OFF: Termination resistor not connected	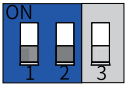
DIP switch S2	CAN2 termination resistor (during CAN communication through external CAN2/RS485 communication terminals marked by CN4)	3 set to ON: Termination resistor enabled	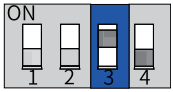
		3 set to OFF: Termination resistor disabled	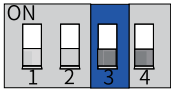

Table 3–48 Settings of termination resistors for the drive unit (dual-axis)

Mark	Function		DIP position
DIP switch S1	CAN1 termination resistor selection (during CAN communication through terminals RJ45A/RJ45B)	1 and 2 set to ON: Termination resistor enabled	
		Toggle positions 1 and 2 to OFF: Termination resistor not connected	
DIP switch S2	CAN2 termination resistor (during CAN communication through external CAN2/ RS485 communication terminals marked by CN4)	3 set to ON: Termination resistor enabled	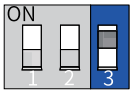
		3 set to OFF: Termination resistor disabled	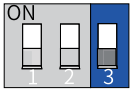

3.8.3 PROFIBUS DP and PROFIBUS DP-to-CAN Communication Connection

Product models and communication terminals

The power supply unit and the drive unit communicate with the PLC through the PROFIBUS DP communication terminal (DB9). The following table describes the power supply unit and the drive unit models that can communicate with the PLC based on the PROFIBUS DP protocol and the communication terminals.

Terminal Mark	Terminal Name	Power Supply Unit Model (MD810-20M4TXXGXXX)		S1/S2 State
		G010, G110		
None (DB9)	PROFIBUS DP communication terminal (DB9)	one		*"Table 3–12 " on page 87*
Terminal Mark	Terminal Name	Drive Unit (Single-axis) Model (MD810-50M4TXXGXXX)		Terminal Assignment
		G210	G211	
None (DB9 terminal)	PROFIBUS DP communication terminal	one	one	*"Table 3–23 " on page 99*
Terminal Mark	Terminal Name	Drive Unit (Dual-axis) Model (MD810-50M4TDXXGXXX)		S1/S2 State
		G210	G211	

Terminal Mark	Terminal Name	Power Supply Unit Model (MD810-20M4TXXGXXX)		S1/S2 State
		G010, G110		
None (DB9)	PROFIBUS DP communication terminal	one	one	"Table 3-37 " on page 114

Note

"One" indicates that the model has one communication terminal of this type.

Network topology (PROFIBUS DP communication)

When both the power supply unit and the drive unit support PROFIBUS DP communication, communication bus connection is described as follows:

- The power supply unit and the drive unit communicate with the PLC through the PROFIBUS DP communication terminal (DB9).
- The power supply unit and the drive unit function as the slave, and the PLC as the master.
- If there are more than 32 nodes, a repeater must be installed. A maximum of 32 nodes (including the repeater) can be connected between two repeaters.

The following figure describes PROFIBUS DP communication bus connection.

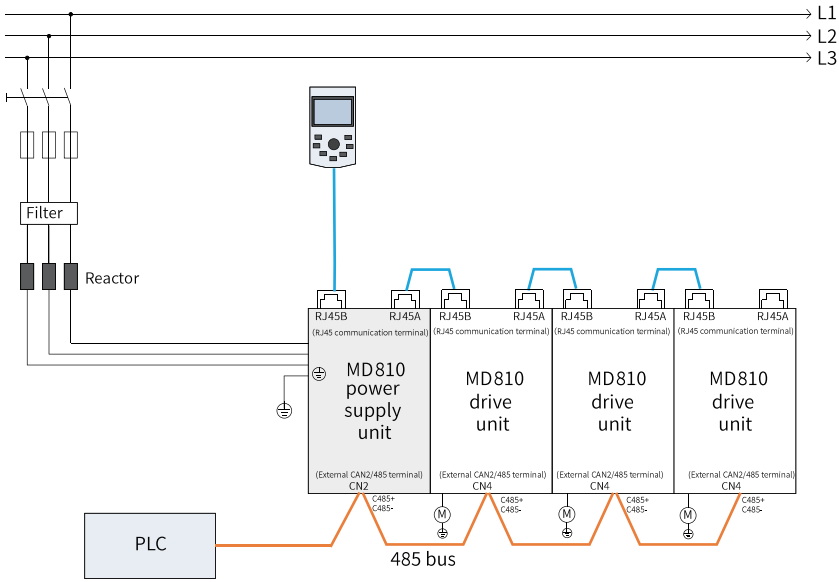

Figure 3-44 PROFIBUS DP communication bus connection

Network topology (PROFIBUS DP-to-CAN communication)

When only the power supply unit supports PROFIBUS DP communication, the drive unit can receive control signals of the PLC through the power supply unit. Communication bus connection is described as follows:

- The power supply unit and the PLC communicate with each other through the PROFIBUS DP communication terminal (DB9).
- The power supply unit functions as the slave, and the PLC as the master.
- The power supply unit and the drive unit are cascaded by CAN bus through the RJ45 communication terminals (RJ45A/RJ45B).
- If there are more than 32 nodes, a repeater must be installed. A maximum of 32 nodes (including the repeater) can be connected between two repeaters.

The following figure describes PROFIBUS DP-to-CAN communication bus connection.

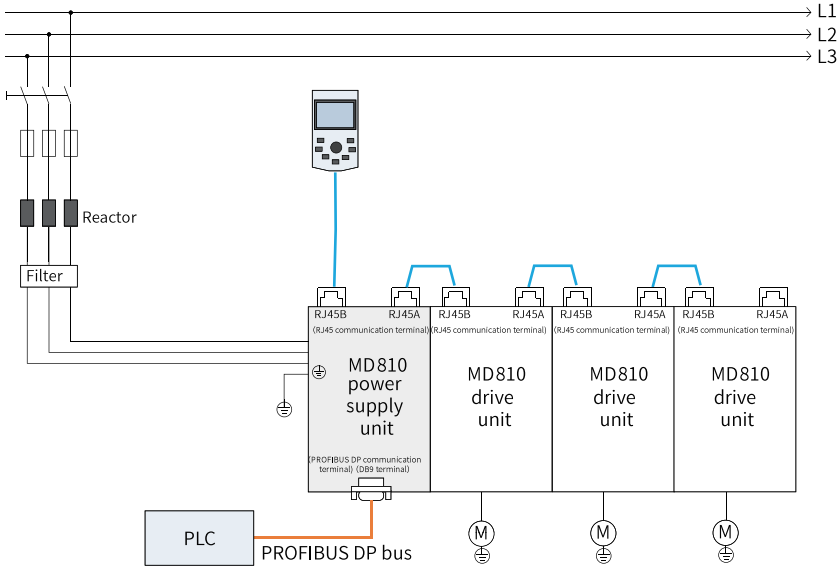

Figure 3-45 PROFIBUS DP-to-CAN communication bus connection

Transmission distance

The following table describes the maximum number of nodes and transmission distance supported at different baud rates.

Baud Rate (bps)	Max. Number of Nodes	Max. Length of Cable Type A (m)	Max. Length of Cable Type B (m)
9.6	127	1200	1200
19.2	127	1200	1200
187.5	127	600	600
500	127	200	200

Baud Rate (bps)	Max. Number of Nodes	Max. Length of Cable Type A (m)	Max. Length of Cable Type B (m)
1500	127	100	70
3000	127	100	Not supported
6000	127	100	
12000	127	100	

3.8.4 PROFINET-to-CAN Communication Connection

Product models and communication terminals

For the MD810 series AC drive, only the power supply unit can communicate with the PLC based on the PROFINET protocol, and the drive unit receives control signals of the PLC through the power supply unit.

The power supply unit communicates with the PLC through PROFINET communication terminals ProfinetA and ProfinetB. The following table describes the power supply unit models that can communicate with the PLC based on the PROFINET protocol and the communication terminals.

Terminal Mark	Terminal Name	Power Supply Unit Model (MD810-20M4TXXGXXX)	Terminal Assignment
		G020, G120	
ProfinetA and ProfinetB	PROFINET communication terminal	one	*"Table 3–14 " on page 89*

Note

"One" indicates that the model has one communication terminal of this type.

Network topology

PROFINET communicate bus connection is described as follows:

- The power supply unit communicates with the PLC through PROFINET communication terminals ProfinetA and ProfinetB.
- The power supply unit functions as the slave, and the PLC as the master.
- The power supply unit and the drive unit are cascaded by CAN bus through the RJ45 communication terminals (RJ45A/RJ45B).

The following figure describes PROFINET-to-CAN communication bus connection.

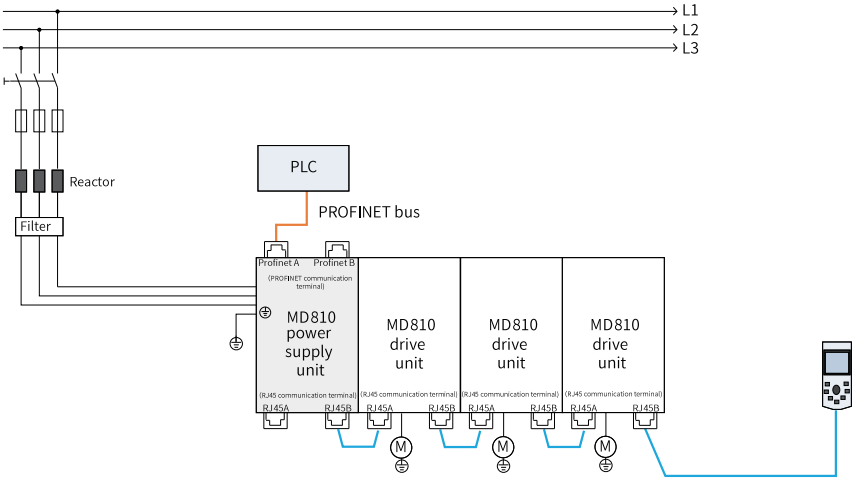

Figure 3-46 PROFINET-to-CAN communication bus connection (single power supply unit)

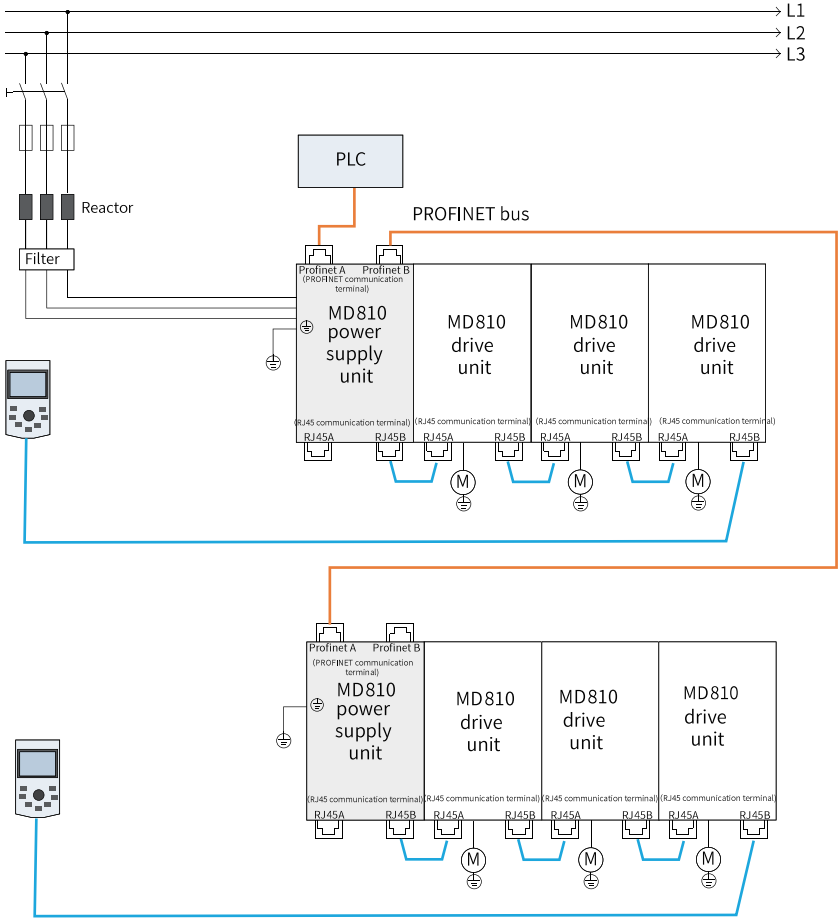

Figure 3-47 PROFINET-to-CAN communication bus connection (multiple power supply units)

3.8.5 EtherCAT Communication Connection

Product models and communication terminals

For the MD810 series drive, only the drive unit can communicate with the PLC based on the EtherCAT protocol, and the power supply unit receives control signals of the PLC through the drive unit.

The drive unit communicates with the PLC through the EtherCAT communication terminals ECT-IN and ECT-OUT. The following table describes the drive unit models that can

communicate with the PLC based on the EtherCAT protocol and the communication terminals.

Terminal Mark	Terminal Name	Drive Unit (Single-axis) Model (MD810-50M4TXXGXXX)		Terminal Assignment
		G530	G531	
ECT-IN/ECT-OUT	EtherCAT communication terminal	one	one	*"Table 3–28 " on page 103*

Note

"One" indicates that the model has one communication terminal of this type.

Network topology

EtherCAT communication bus connection is described as follows:

- The drive unit communicates with the PLC through the EtherCAT communication terminals ECT-IN and ECT-OUT.
- The drive unit functions as the slave, and the PLC as the master.
- The power supply unit and the drive unit are cascaded by CAN bus through the RJ45 communication terminals (RJ45A/RJ45B).

The following figure describes the EtherCAT communication bus connection.

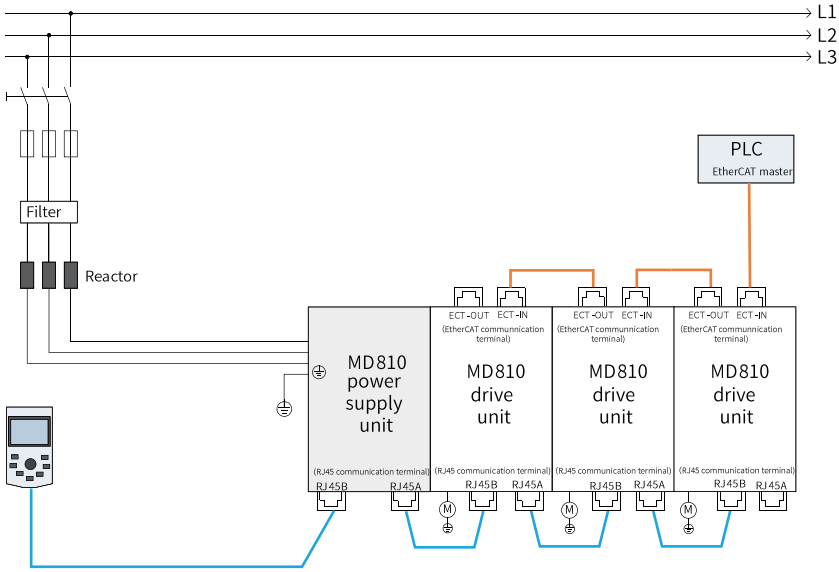

Figure 3-48 EtherCAT communication bus connection

3.9 Encoder Signal Connection

3.9.1 Wiring the ABZ Encoders

3.9.1.1 Encoder Terminals and Specifications

Product models and encoder terminals

The following table describes the drive unit models that support ABZ encoders and the encoder terminals.

Mark	Name	Drive Unit (Single-axis) Model (MD810-50M4TXXGXXX)							Terminal Assignment	Descriptions
		G200	G201	G210	G211	G400	G530	G531		
CN3	ABZ encoder terminal	one	one	one	one	one	one	one	*"Table 3–19 " on page 98*	Differential, collector, and push-pull encoders are supported. Differential encoders are powered by 5 V power supply, and collector and push-pull encoders are powered by 15 V power supply. Sub-switch 4 of DIP switch S2 is used to switch between 5 V and 15 V.
None (DB15 terminal)	Multi-encoder terminal	-	-	-	-	-	one	one	*"Table 3–26 " on page 101*	If the multi-encoder terminal is used to connect to the ABZ encoder, only 5 V differential ABZ encoders are supported.

Mark	Name	Drive Unit (Dual-axis) Model (MD810-50M4TDXXGXXX)				S1/S2 State	Descriptions
		G200	G201	G210	G211		
CN2	ABZ encoder terminal for axis 1	one	one	one	one	*"Table 3–33 " on page 112*	Differential, collector, and push-pull encoders are supported. Differential encoders are powered by 5 V power supply, and collector and push-pull encoders are powered by 15 V power supply. F1–25 is used to switch between 5 V and 15 V.
CN4	ABZ encoder terminal for axis 2	one	one	one	one		

Note

- "One" indicates that the model has one terminal of this type.
- "-" indicates that the model does not have the terminal of this type.

Encoder specifications

Encoder power supply	5 V/200 mA, 15 V/100 mA
Maximum input frequency	Differential: 500 kHz; collector: 50 kHz; push-pull: 100 kHz
Cable specification	26AWG to 16AWG
Terminal clearance	5.08 mm
Terminal screw	Cross head

3.9.1.2 Differential Input Wiring

The procedure is as follows:

1. Connect the output signal cables of the encoder to A+/A-, B+/B-, Z+/Z-, 5V/15V, and PGND of the ABZ encoder terminal. MD810-50M4TXXG530/MD810-50M4TXXG531 models (hereinafter referred to as 530/531 single-axis drive unit) supports transmission of differential ABZ encoder signals by the multi-encoder terminal (DB15).
2. Set the encoder power supply to 5 V by setting the sub-switch 4 of DIP switch S2 to ON.
3. Connect the shield of the encoder cable to the PE terminal next to the ABZ encoder terminal.
4. Select the filtering function according to the application by setting F1-29 or F1-42 (for 530/531 single-axis drive units).

Note

For 530/531 models of the single-axis drive units, the multi-encoder terminal (DB15) of the models is used to connect to the differential ABZ encoder. In this case, set F1–23 to 0 and set F1–43 to select a proper filter.

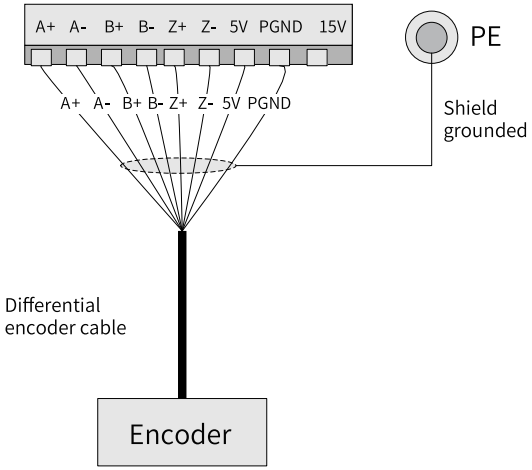

Figure 3-49 Wiring the differential encoder through the ABZ encoder terminal

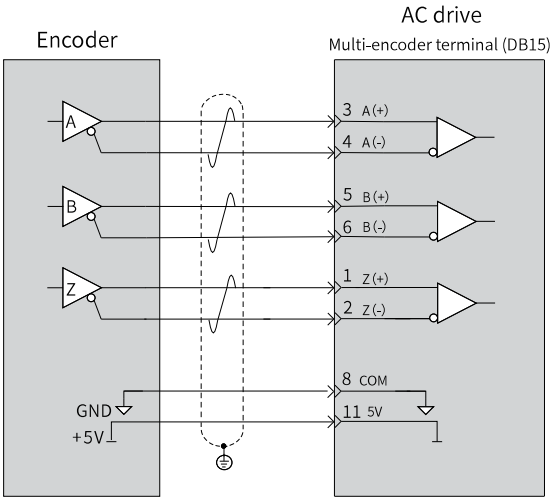

Figure 3-50 Wiring the differential encoder through the multi-encoder terminal (DB15)

Note

- The power supply of the differential ABZ encoder only supports 5 V. However, the ABZ encoder terminal supports the power supply of 5 V and 15 V. Therefore, before power-on, set sub-switch 4 of DIP switch S2 to ON to select 5 V output. Otherwise, the encoder will be damaged due to high power supply voltage.
- If the encoder has no Z+/Z- signal, connect Z+ of the multi-encoder terminal (DB15) to 5V, and Z- to the COM terminal. Otherwise, the encoder disconnection fault will be reported.
- It is recommended to use shielded twisted pair cables (as shown in *"Figure 3–51 " on page 143*) for differential encoders. Wire cables according to the difference, and select the appropriate cross-sectional area of the cable according to the distance between the encoder and the AC drive. For specific requirements, see *"Table 3–49 " on page 143*.

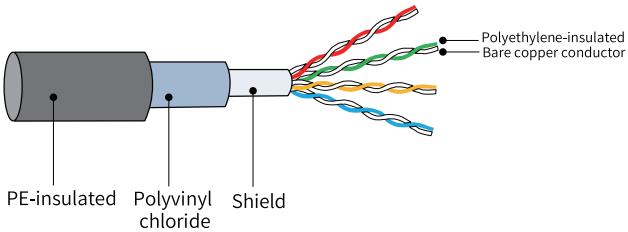

Figure 3-51 Shielded twisted pair

Table 3–49 Relationship between the length and the cross-sectional area of the encoder cable

Cable Length (m)	Specification (AWG)
10	⩽26
20	
30	⩽24
40	
50	⩽22
60	
70	⩽21
80	
90	⩽20
100	

3.9.1.3 Collector Input Wiring

Collector input wiring 1

Due to the collector electrical characteristics, the rising edge of the signal is slow, and the signal transmission distance is limited. The collector input wiring method is suitable only for applications with the cable length shorter than 20 m and the frequency lower than 50 kHz. For applications with the cable length equal to or longer than 20 m or frequencies equal to or greater than 50kHz, it is recommended to use the push-pull output encoders or differential output encoders.

Collector encoder input wiring 1 procedure:

1. Connect the A, B, and Z output signal cables of the encoder to A-, B-, and Z- of the ABZ encoder terminal, respectively. Connect the power supply cable of the encoder to 15V and PGND of the ABZ encoder terminal.
2. Change the power supply mode of the ABZ encoder terminal to 15V by setting sub-switch 4 of DIP switch S2 to OFF.
3. Connect the shield of the encoder cable to the PE terminal next to the ABZ encoder terminal.
4. Select the filtering function according to the application by setting F1-29 or F1-42 (for 530/531 single-axis drive units).

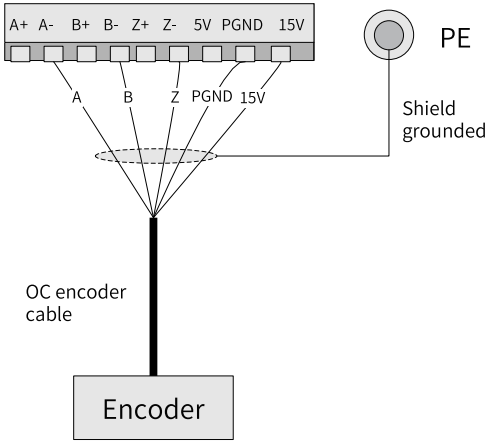

Figure 3-52 Collector encoder input wiring 1

Collector input wiring 2

When one of the following situations is encountered, and only the collector output encoder can be selected, collector input wiring 2 can be applied.

- The encoder cable length is longer than 20m.
- The encoder signal frequency is greater than 50 kHz.

- In the closed-loop vector control mode, when the running frequency is greater than a certain value, the motor encounters abnormality.

Collector encoder input wiring 2 procedure:

1. Connect the A, B, and Z output signal cables of the encoder to A+, B+, and Z+ of the ABZ encoder terminal, respectively. At the same time, short A-, B-, and Z- to PGND, and connect the power supply cable of the encoder to 15V and PGND.
2. Change the power supply mode of the ABZ encoder terminal to 15V by setting sub-switch 4 of DIP switch S2 to OFF.
3. Connect the shield of the encoder cable to the PE terminal next to the ABZ encoder terminal.
4. Select the filtering function according to the application by setting F1-29 or F1-42 (for 530/531 single-axis drive units).

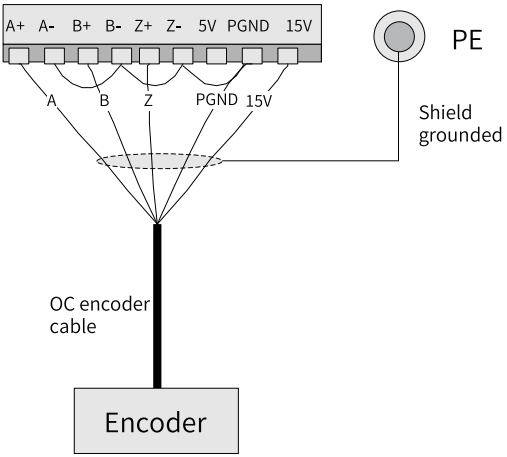

Figure 3-53 Collector encoder input wiring 2

3.9.1.4 Push-Pull Input Wiring

The procedure is as follows:

1. For push-pull complementary output encoders (with positive and negative signals, such as A+/A-), connect the A-, B-, and Z- output signal cables of the encoder to A-, B-, and Z- of the ABZ encoder terminal, respectively. Do not connect the A+, B+, and Z+ output signal cables of the encoder. For push-pull single-ended signal output encoders (no positive or negative signals, such as A), connect the A, B, and Z signal cables of the encoder to A-, B-, and Z- of the ABZ encoder terminal, respectively. Then connect the power cable of the encoder to 5V or 15V (as shown in the figure below) and PGND.

2. Select the encoder power supply mode (5 V or 15 V) of the ABZ encoder terminal according to the encoder power supply voltage. Set sub-switch 4 of the DIP switch S2 to ON to select 5 V power supply output, and to OFF to select 15 V power supply output.
3. Connect the shield of the encoder cable to the PE terminal next to the ABZ encoder terminal.
4. Select the filtering function according to the application by setting F1-29 or F1-42 (for 530/531 single-axis drive units).

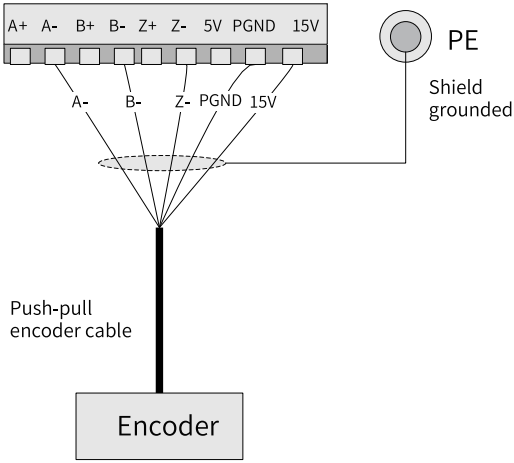

Figure 3-54 Push-pull encoder input wiring

Note

For push-pull complementary output encoders (with positive and negative signals, such as A+/A-), connect the A+/B+/Z+ signal cables or A-/B-/Z- signal cables of the encoder to the A-/B-/Z- terminals of the ABZ encoder. Do not connect the A+/B+/Z+ terminals of the ABZ encoder. Otherwise, the internal circuit of the encoder may be damaged.

3.9.1.5 Distinguishing Collector Output Encoders from Push-Pull Output Encoders

During field debugging, do the following to distinguish the collector output encoder from the push-pull output encoder:

1. Connect the power cable of the encoder to the power supply terminal of the ABZ encoder. Do not connect the A, B, and Z signal cable of the encoder to the ABZ encoder terminal of the AC drive.
2. Switch the multimeter to the DC voltage level, connect the black test lead to PGND of the ABZ encoder terminal, and the red test lead to the encoder A or B output signal cable.

3. Slowly turn the motor shaft. If the multimeter shows that the voltage changes, the encoder is a push-pull output type; if the multimeter shows that the voltage keeps at 0 V, the encoder is a collector output type.

3.9.2 Wiring Resolver Encoders

Product models and encoder terminals

The following table describes the drive unit models that support resolver encoders and the encoder terminals.

Terminal Mark	Terminal Name	Drive Unit (Single-axis) Model (MD810-50M4TXXG400)	Terminal Assignment	Descriptions
None (DB15 terminal)	Resolver encoder terminal	one	*"Table 3–25 " on page 100*	Supports the resolver encoder.

Note

"One" indicates that the model has one encoder terminal of this type.

Encoder specifications

Resolution	12-bit
Excitation Frequency	10 kHz
Excitation Output Voltage	7Vrms
Sin/CosVoltage	3.5Vpp
Transformation Ratio	0.5
Maximum Motor Speed	60000 rpm
Frequency-Division Coefficient	1:N
Frequency Division Number	1024/N
Frequency Division Interface	Differential/OC/push–pull

Description

Connect the signal cable of the resolver encoder to the resolver encoder terminal (DB15) of the AC drive. The wiring diagram is shown in the figure below.

Caution

Shielded twisted pair (STP) cables are recommended. Connect one twisted pair cable to one pair of differential signal cables.

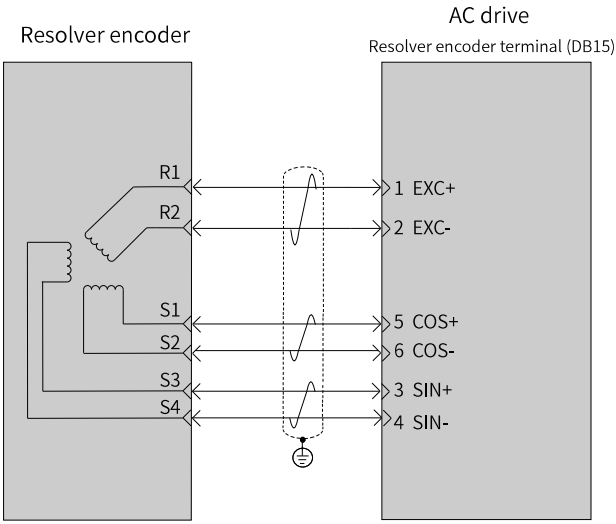

Figure 3-55 Wiring the resolver encoder

When you need to use the incremental differential frequency division output function, connect the PLC or PG card to the resolver encoder terminal (DB15) of the AC drive, as shown in the following figure. In addition, provide power supply for frequency division output according to the user's level requirements.

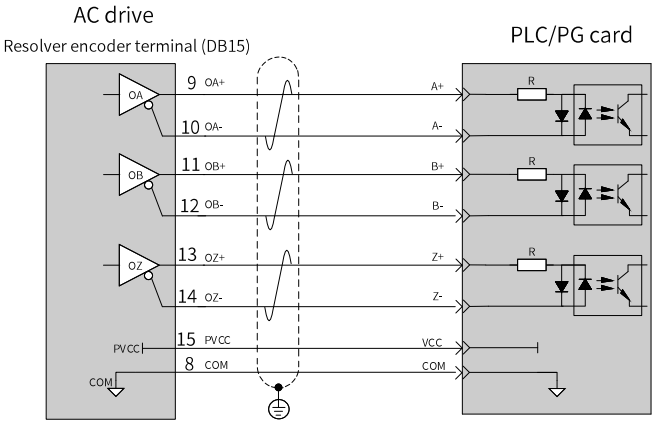

Figure 3-56 Inovance AC output reactor model

Parameter Settings

Set F1-28 (encoder type) to 3 (resolver encoder).

Set F1-29 to select the related filter mode.

3.9.3 Wiring the Sin-Cos Encoder

Product models and encoder terminals

The following table describes the drive unit models that support sin-cos encoders and the encoder terminals.

Terminal Mark	Terminal Name	Drive Unit (Single-axis) Model (MD810-50M4TXXGXXX)		Terminal Assignment
		G530	G531	
None (DB15 terminal)	Multi-encoder terminal	one	one	*"Table 3–26 " on page 101*

Note

"One" indicates that the model has one encoder terminal of this type.

Encoder specifications

Power supply	5 V/300 mA
Differential voltage	0.6 Vpp to 1.2 Vpp，1.0 Vpp (Type)
Maximum common mode voltage	3 V
Bandwidth	300 kHz

Description of wiring

Connect the signal cable of the sin-cos encoder to the multi-encoder terminal (DB15) of the drive, as shown below.

Caution

Connect one twisted pair cables to one pair of differential signal cables. It is recommended that the twisted cable not exceed 10 m.

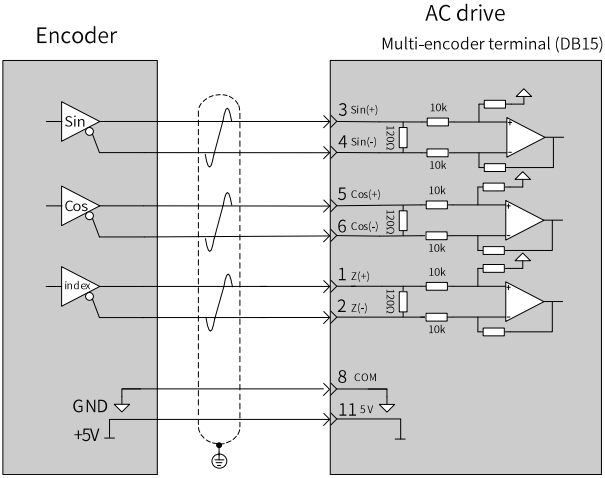

Figure 3-57 Wiring the sin-cos encoder

Parameter Settings

Set F1-23 (PG2 encoder type) to 2 to select the sin-cos encoder.

Set F1-21 (sinusoid per revolution of sin-cos encoder) according to the actual value of the encoder.

3.9.4 Wiring Inovance 23-Bit Communication Encoders

Product models and encoder terminals

The following table describes the drive unit models that support Inovance 23-bit communication encoders and the encoder terminals.

Terminal Mark	Terminal Name	Drive Unit (Single-axis) Model (MD810-50M4TXXGXXX)			Terminal Assignment
		G300	G530	G531	
None (DB9 terminal)	23-bit encoder terminal	one	/	/	*"Table 3–24 " on page 100*
None (DB15 terminal)	Multi-encoder terminal	/	one	one	*"Table 3–26 " on page 101*
Terminal Mark	Terminal Name	Drive Unit (Dual-axis) Model (MD810-50M4TDXXGXXX)			S1/S2 State
		G300			
None (DB9)	23-bit encoder terminal	two			*"Table 3–38 " on page 114*

Note

- "One" indicates that the model has one encoder terminal of this type.
- "Two" indicates that the model has two encoder terminals of this type.
- "/" indicates that the model does not have the encoder terminal of this type.

Encoder specifications

Power supply	5 V/300 mA
Encoder resolution	23bit
Data refresh frequency	16 kHz
RS485 communication rate	4 Mbit/s

Wiring description

Encoder wiring:

Connect the signal cable of the Inovance 23-bit communication encoder to the 23-bit encoder terminal (DB9) or multi-encoder terminal (DB15) of the AC drive, as shown below.

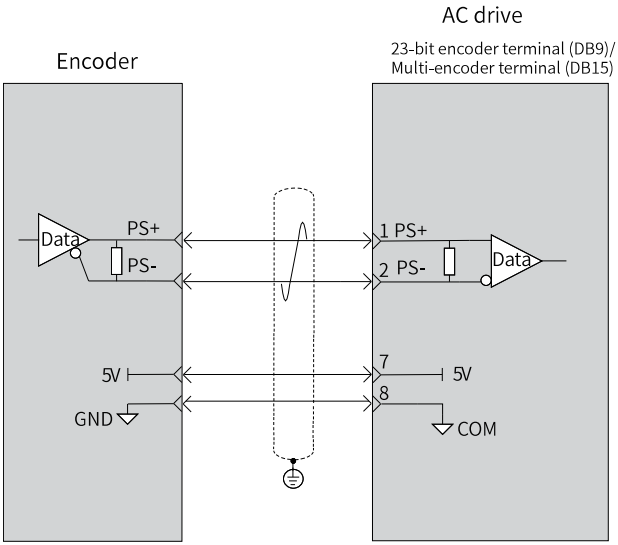

Figure 3-58 Wiring of Inovance 23-bit communication encoders

Parameter Settings

Encoder type settings:

- For drive unit (single-axis) 530/531 models, set F1-23 (PG2 encoder type) to 1 to select the 23-bit encoder.
- For other drive units that support 23-bit encoders, set F1-28 (encoder type) to 1 to select the 23-bit encoder.

The 23-bit absolute value encoder adopts high-speed RS485 bus, and the communication distance is related to the selected cables. The cables must meet the following requirements:

- The cross-sectional area is not smaller than 22AWG.
- The resistance is not higher than 2.5 Ω.
- The distributed capacitance is not higher than 4.8 nF.
- The shielded twisted pair is recommended.

Leoni L45467-J17-B15 is recommended.

3.9.5 Wiring the SSI Encoder

Product models and encoder terminals

The following table describes the drive unit models that support SSI encoders and the encoder terminals.

Terminal Mark	Terminal Name	Drive Unit (Single-axis) Model (MD810-50M4TXXGXXX)		Terminal Assignment
		G530	G531	
None (DB15 terminal)	Multi-encoder terminal	one	one	*"Table 3–26 " on page 101*

Note

"One" indicates that the model has one encoder terminal of this type.

Encoder specifications

Encoder power supply	5 V/300 mA, 12 V/200 mA
Encoder resolution	32bit
Maximum SSI Communication Speed	Maximum 1 Mbps

Wiring description

Connect the signal cable of the SSI encoder to the multi-encoder terminal (DB15) of the AC drive, as shown below.

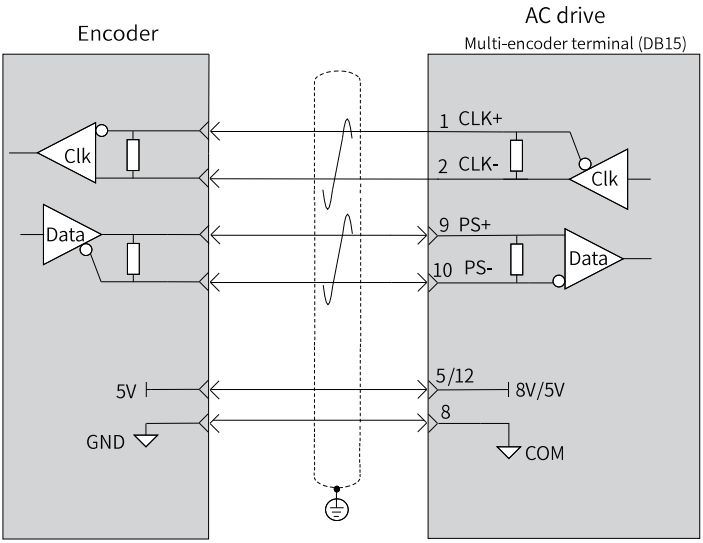

Figure 3-59 Wiring the SSI encoder

Note

Select the power supply voltage according to the encoder power supply.

"Table 3–50 " on page 154 describes the relationship between the SSI baud rate and the cable length.

Table 3–50 Relationship between the SSI baud rate and the cable length

Baud Rate (kbps)	Cable Length (m)
1000	10
500	25
400	50
250	150
125	300

Parameter settings

- Set F1-23 (PG2 encoder type) to 3 to select the SSI encoder.
- Set F1-47 (encoder type) to 0 to select the SSI resolver encoder or to 1 to select the SSI laser encoder.
- Set F1-38 (SSI encoder baud rate) according to the encoder specification and the cable length. In general, the higher the baud rate, the shorter the data transmission time, and the shorter the allowable cable length. The lower the baud rate, the longer the data transmission time, and the longer the allowable cable length. *"Table 3–50 " on page 154* describes the relationship between the SSI baud rate and the cable length.
- Set F1-39 (single-turn bit of SSI encoder) according to the encoder specifications. The maximum value is 24 bits.
- Set F1-40 (multi-turn bit of SSI encoder) according to the encoder specifications. The maximum value is 24 bits.
- Set F1-44 (error bit of SSI encoder).

Note

In the SSI data, the sum of the multi-turn bits, the single-turn bits, and the error bits must be less than 36 bits, and the upper limit resolution of the multi-turn bits and single-turn bits must be less than 24 bits.

3.9.6 Incremental Frequency Division Output

Product models and encoder terminals

The following table describes the drive unit models that support incremental frequency division output the encoder terminals.

Terminal Mark	Terminal Name	Drive Unit (Single-axis) Model (MD810-50M4TXXGXXX)		Terminal Assignment
		G530	G531	
None (DB15 terminal)	Multi-encoder terminal	one	one	*"Table 3–26 " on page 101*

The following table describes the drive unit models that support resolver encoders and the encoder terminals.

Terminal Mark	Terminal Name	Drive Unit (Single-axis) Model (MD810-50M4TXXG400)	Terminal Assignment
None (DB15 terminal)	Resolver encoder terminal	one	*"Table 3–25 " on page 100*

Specifications for frequency division output

Power Supply	5 V to 30 V
Type	ABZ incremental
Interface	Push-pull output
Frequency-division output	50 mA
Maximum frequency	500 kHz

Description of wiring

Connect the frequency division PLC or PG card signal cable to the resolver encoder terminal (DB15) or multi-encoder terminal (DB15) of the AC drive, as shown below, and provide the power supply for frequency division output according to the level requirements.

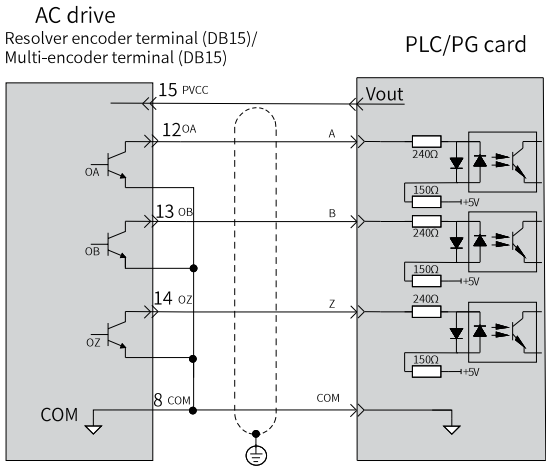

Figure 3-60 Wiring for incremental frequency division output

Parameter Settings

Set F1-20 (frequency division signal source).

If the frequency division signal is given by ABZ incremental encoder, set the ABZ incremental frequency division coefficient through F1-35. Otherwise, set the frequency coefficient of the absolute encoders through F1-46.

3.9.7 Selecting Filter Modes

Select the filter mode of the encoder terminal by setting F1-29, F1-42, and F1-43. F1-42 and F1-43 are dedicated for 530/531 single-axis drive unit. There are four filter modes, including non-adaptive filtering, adaptive filtering (default value), fixed interlocking, and automatic interlocking, Descriptions for each filter mode are as follows.

- Non-adaptive filtering: The filter coefficient of the encoder terminal is fixed and small, which is suitable for applications with no or small interference, high speed, and large frequency hopping.
- Adaptive filtering: The filter coefficient of the encoder terminal is automatically adjustable. Therefore, the terminal has strong anti-interference abilities, especially when the feedback speed of the encoder is lower than 100 kHz. This mode applies to scenarios with strong interference. It is the default mode.
- Fixed interlock: When the PG card is set to this mode, it has all functions when set to adaptive filtering. In addition, in this mode, the PG card also features edge jitter elimination of the encoder feedback signal. This mode applies to scenarios where edge jitter exists in the encoder feedback signal.
- Automatic interlock: When the terminal is set to the fixed interlocking mode at zero speed, the useful signal may be mistakenly eliminated as edge jitter. In this case, automatic interlocking is recommended, which enables the terminal to switch between

the adaptive filtering mode and the fixed interlocking mode. This can better cope with the working conditions with both zero speed and non-zero speed.

3.10 Wiring STO Terminals

Product models and encoder terminals

The following table describes the drive unit (single-axis) models that support the STO function and the STO terminal.

Terminal Mark	Terminal Name	Drive Unit (Single-axis) Model (MD810-50M4TXXGXXX)								Terminal Assignment
		G200	G201	G210	G211	G300	G400	G530	G531	
CN6	STO terminal	/	/	/	/	/	/	Reserved	one	*"Table 3–21 " on page 99*
STO	STO terminal	/	one	Reserved	one	Reserved	Reserved	/	/	
Terminal Mark	Terminal Name	Drive Unit (Dual-axis) Model (MD810-50M4TDXXGXXX)								S1/S2 State
		G200	G201	G210		G211			G300	
STO	Axis 1 STO terminal, axis 2 STO terminal	Reserved	one	Reserved		one			/	*"Table 3–40 " on page 116*

Note

- "One" indicates that the model has one terminal of this type.
- "/" indicates that the model does not have the terminal of this type.
- “Reserved” indicates that the model has the terminal of this type without electrical connection.

Electrical specifications and connection of the input circuit

The following table describes the relationship between the STO input status and the AC drive working status.

STO1 input status	STO2 input status	AC drive state
Low	Low	Not running
Low	High	
High	Low	
High	High	Running

The following table describes the electrical characteristics of the safety request input signal.

Items	Characteristics	Description
Voltage range	24 VDC (±15%)	/
Input current	4 mA (Typ.)	This is the value per channel.
Standards of logic levels	Low: < 3 V; high: >15 V	/
Digital input impedance	5.78 kΩ	/

The following figure describes the STO terminal wiring.

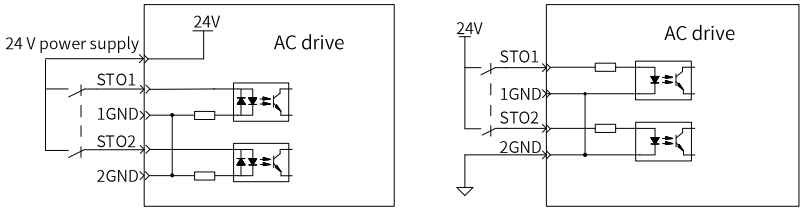

Wiring mode when the internal 24 V power supply of the AC drive is used

Wiring mode when the external 24 V power supply of the AC drive is used

Figure 3-61 STO terminal wiring

EMC Requirements

- To avoid short circuits between two adjacent conductors, use shielded cables with the shield connected to the protection ground, or use flat cables with a ground cable inserted between each signal conductor.
- Double-layer shielded cables or single-layer shielded twisted pair cables are recommended.
- Use the conductive metal sheet to fix and ground the cable shield, as shown in the figure below.

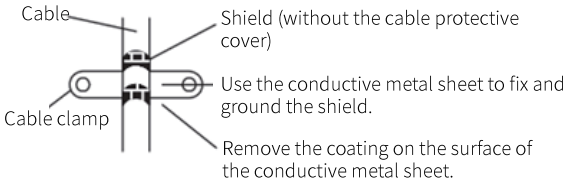

- The maximum cable length allowed between the AC drive and safety switch is 30 m.

Other requirements

- All cables must be well protected, routed, and secured.
- Ensure that the cables are not pulled or pinched during installation.
- When using the external 24 V power supply, to avoid common faults of the cable, route STO1 cables and STO2 cables through different routes or use double-layer shielded cables for protection.

Cable	Description
Category	Low voltage, double-layer shielded cables or single-layer shielded twisted pair cables
Maximum size	0.8 mm^2(18 AWG)
Minimum size	0.3 mm^2(28 AWG)
Maximum length	The maximum length between the STO input and the operating contact is 30 m.

3.11 Grounding

3.11.1Grounding the Control Board

By default, the control board is grounded. When EMC interference exists, remove the grounding screws of the control board.

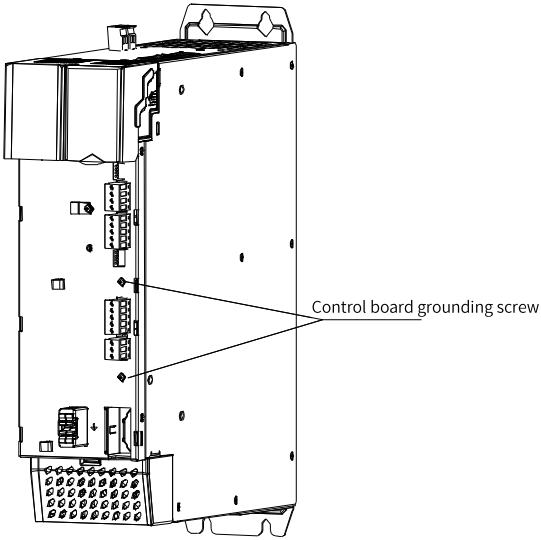

Figure 3-62 Grounding screw of the control board for the power supply unit

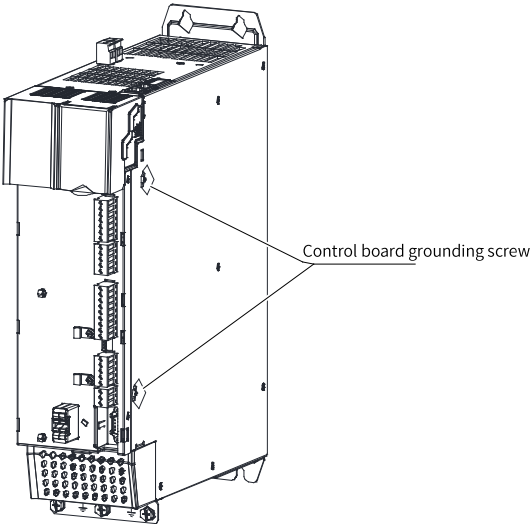

Figure 3-63 Grounding screw of the control board for the drive unit

3.11.2Grounding a Single Device

Connect the power supply unit, drive unit, and components such as the input reactor and filter to the PE copper bar by star connection, as shown in the following figure.

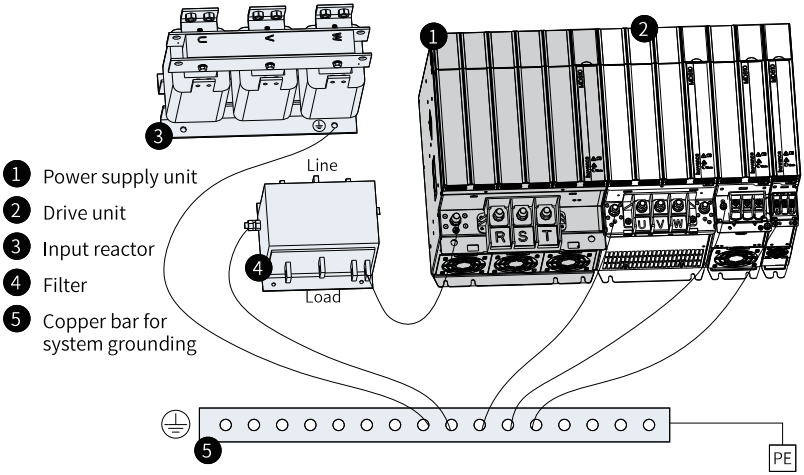

Figure 3-64 System grounding connection

3.11.3Grounding Multiple Devices

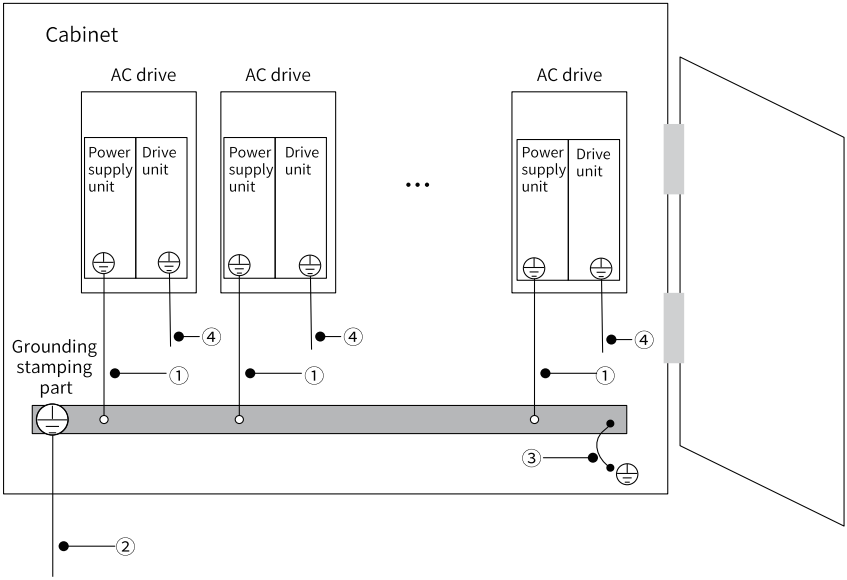

Figure 3-65 Grounding of paralleled drives

Table 3–51 Description for grounding of paralleled drives

No.	Description
①	Connect the main circuit input PE terminal to the grounding stamping part of the control cabinet through the protective grounding conductor.
②	Connect the PE cable on the input power supply end to the grounding stamping part of the control cabinet.
③	Connect the grounding stamping part of the control cabinet to the metal enclosure of the control cabinet through the protective grounding conductor.
④	Connect the motor output grounding cable to the output PE terminal of the drive.

3.11.4Grounding the Cabinet System

To suppress the interference of devices installed in the cabinet, isolate them that might interfere with each other. According to the strength of interference, devices must be installed in different EMC areas or cabinets. The following table describes the installation requirements.

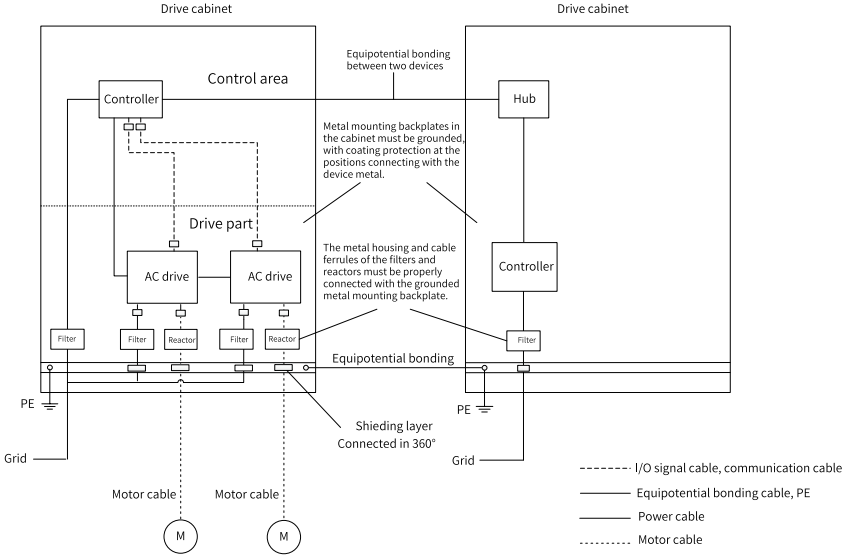

Figure 3-66 Recommended cabinet system grounding

Table 3–52 Requirements of cabinet system grounding

No.	Wiring Requirement
1	Install the control devices and drive devices into two separate cabinets.
2	Use grounding cables with a cross-sectional area of at least 16 mm^2 to connect different cabinets, therefore realizing equipotential between the cabinets.
3	Place the devices in different areas in the cabinet according to the device signal strength.
4	Carry out equipotential bonding for the devices in different areas of the cabinet.
5	Shield all communication (for example, RS485) and signal cables leading from the electrical cabinet.
6	Place the power input filter close to the input interface of the cabinet.
7	Spray each grounding point in the cabinet.

4 Option Selection

4.1 Co-bus External Power Terminal

The bus can be used to connect non-adjacent units by co-bus external power terminal.

- The 200 A co-bus external power terminal is applicable to the booksize unit with the width of 50 mm, including:
  Power supply unit: 22 kW

  1.5-7.5 kW drive unit (single-axis) and 1.5-5.5 kW drive unit (dual-axis)

- The 400 A co-bus external power terminal is applicable to the booksize unit with the width of 100 mm, 200 mm, and 300 mm, including:
  45 kW, 110 kW, and 160 kW power supply unit

  11-160 kW drive unit (single-axis) and 7.5-18.5 kW drive unit (dual-axis)

The following figure describes the co-bus external power terminal.

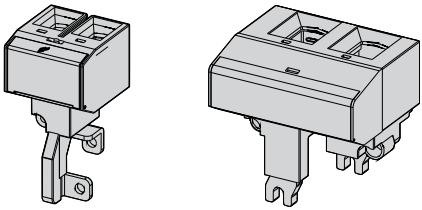

200 A co-bus external power terminal

400 A co-bus external power terminal

Figure 4-1 Co-bus external power terminal

Table 4–1 Recommended cross-sectional area of the cable for the co-bus external power terminal

Terminal Model	Cross-sectional Area of the Cable
200 A co-bus external power terminal	10AWG to 1AWG
400 A co-bus external power terminal	6AWG to 4/0AWG, 250 kcmil

4.2 Through-Hole Mounting Bracket

Through-hole mounting brackets are required only for single-row installation of booksize units. Select a through-hole mounting bracket based on the unit's width.

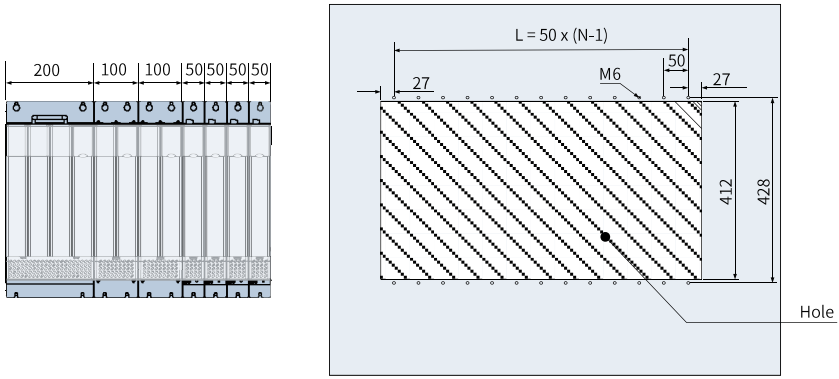

Figure 4-2 Dimensions of the through-hole mounting bracket and mounting hole dimensions on the backplane (unit: mm)

4.3 Air Guide Plate

Air guide plates are required only for dual-row installation of booksize units. Select an air guide plate based on the unit's width.

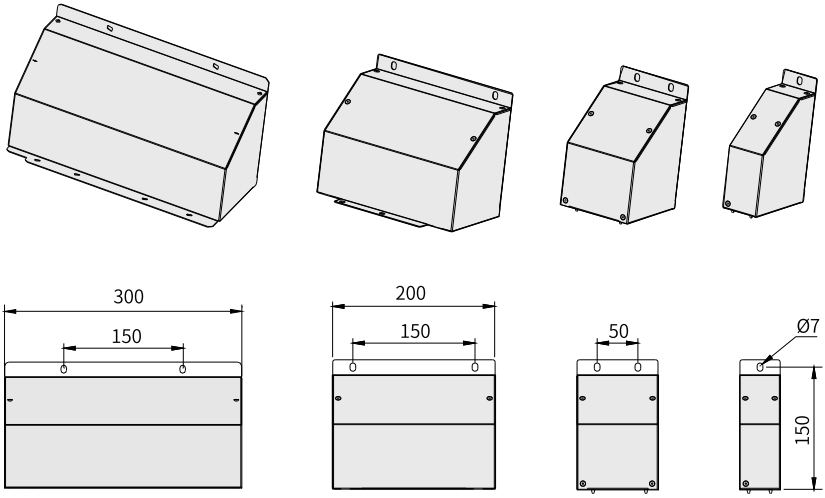

Figure 4-3 Dimensions of the air guide plate (unit: mm)

4.4 Ground Bracket of Cable Shield

At the output side of the booksize power supply unit and the drive unit, it is recommended to use a motor cable with the shield. in this case, you can use the shield bracket to ground

the cable shield. Select a shield bracket based on the size of the power supply unit and the drive unit, as shown in the following figure and table.

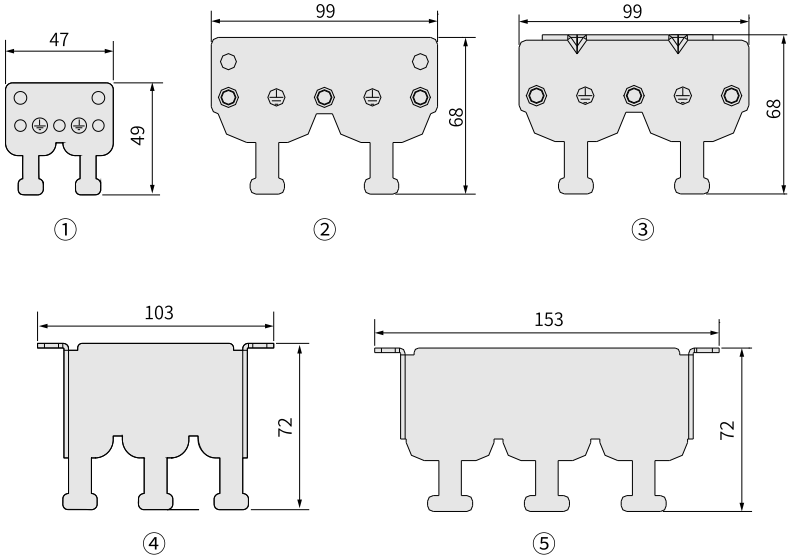

Figure 4-4 Dimensions of the shield bracket (unit: mm)

Table 4–2 Dimensions of the shield bracket (unit: mm)

Width of the Power Supply Unit/Drive Unit	Shield Bracket for the Power Supply Unit	Shield Bracket for the Drive Unit
50 mm	①	①
100 mm	③	②
200 mm	④	④
300 mm	⑤	⑤

4.5 External LCD Operating Panel

The external LCD operating panel SOP-20-810 enables you to copy and modify parameters, and burn programs. The following figure describes the appearance and dimensions of the panel.

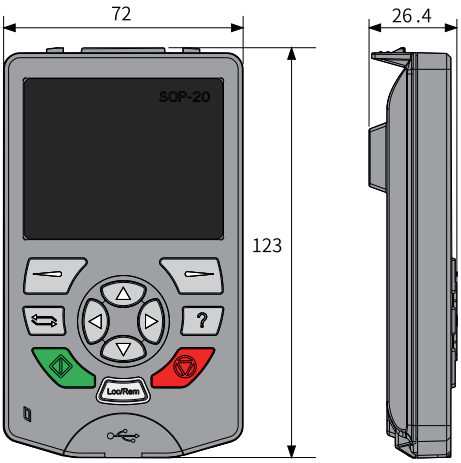

Figure 4-5 Overall dimensions of the external LCD operating panel (unit: mm)

4.6 DC Soft Charge Unit

If a drive unit fails, you need to power off the faulty drive unit and the power supply unit, replace with a new drive unit, and then power on the power supply unit and the new drive unit. To ensure that the power supply unit can operate without power-off during this case, you can install a DC soft charge unit for each drive unit.

Width of 50 mm

Width of 100 mm

Width of 200 mm

Figure 4-6 Appearance of INOV-SU series DC soft charge units

Model selection

Table 4–3 Model selection of INOV-SU series DC soft charge units

Drive Unit Model	DC Soft Charge Unit Model
MD810-50M4T1.5GXXX	INOV-SU-30 (width of 50 mm)
MD810-50M4TD1.5GXXX	
MD810-50M4T2.2GXXX	
MD810-50M4TD2.2GXXX	
MD810-50M4T3.7GXXX	
MD810-50M4TD3.7GXXX	
MD810-50M4T5.5GXXX	
MD810-50M4TD5.5GXXX	
MD810-50M4T7.5GXXX	
MD810-50M4TD7.5GXXX	INOV-SU-60 (width of 100 mm)
MD810-50M4T11GXXX (W)	
MD810-50M4TD11GXXX	
MD810-50M4T15GXXX (W)	
MD810-50M4T18.5GXXX(W)	
MD810-50M4T22GXXX(W)	
MD810-50M4TD15GXXX	INOV-SU-100 (width of 100 mm)
MD810-50M4TD18.5GXXX	
MD810-50M4T30GXXX (W)	
MD810-50M4T37GXXX (W)	
MD810-50M4T45GXXX	INOV-SU-170 (width of 200 mm)
MD810-50M4T55GXXX	
MD810-50M4T75GXXX	
MD810-50M4T90GXXX	-
MD810-50M4T110GXXX	
MD810-50M4T132GXXX	
MD810-50M4T160GXXX	
MD810-50M4T200GXXXH	
MD810-50M4T250GXXXH	
MD810-50M4T315GXXXH	
MD810-50M4T355GXXXH	

Dimensions

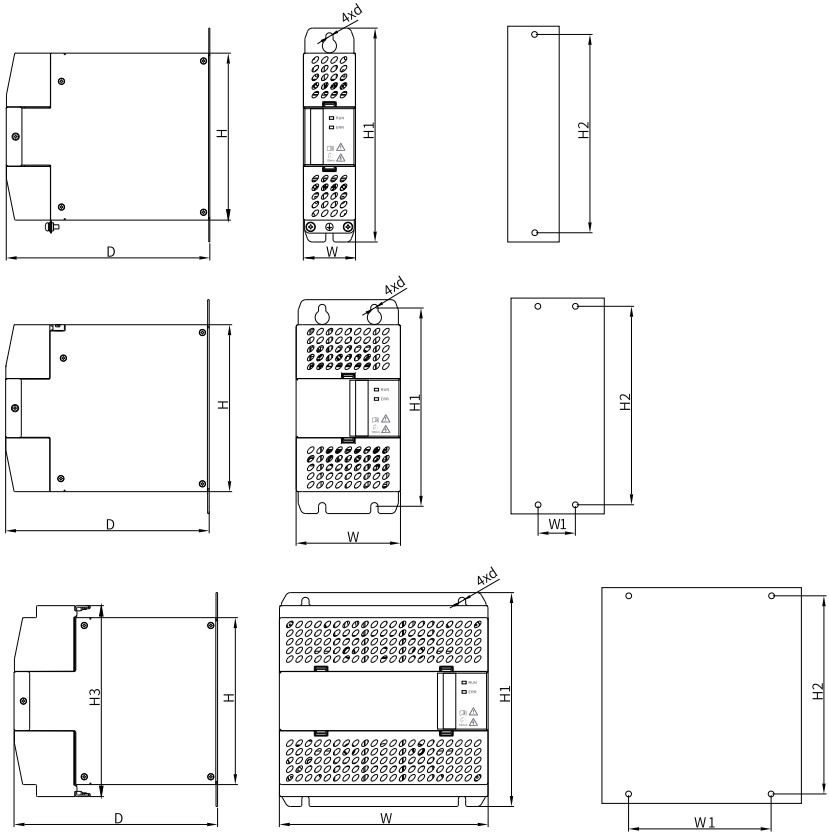

Figure 4-7 Dimensions of the INOV-SU series DC soft charge unit

DC Soft Charge Unit Model	Mounting Hole (mm)		Dimensions (mm)					Mounting Hole Diameter (mm)
	W1	H2	H	H1	H3	W	D	d
INOV-SU-30	-	-	160	205	/	50	195	ϕ7
INOV-SU-60	50	190	160	205	/	100	195	ϕ7
INOV-SU-100	50	190	160	205	/	100	195	ϕ7
INOV-SU-170	150	190	160	205	183	200	195	ϕ7

Description of status indicators

Table 4–4 Indicator description of INOV-SU series DC soft charge units

Indicator		Status Description	Solution
RUN	Steady green	The DC soft charge unit is in normal operation.	/
	Steady off	DC soft charge unit error	Check if the DC soft charge unit is power-on. If the indicator is still off after power-on, the power supply unit is faulty. Contact the agent or Inovance.
ERR	Steady red	DC soft charge unit error	Contact the agent or Inovance.
	Off	The DC soft charge unit is normal.	/

4.7 Braking Components

Braking resistor protection

In applications where a braking resistor is installed, it is recommended to use a resistor with a temperature switch to ensure safety and avoid overheating and burning of the braking resistor. Connect the temperature switch output to the electromagnetic contactor control circuit on the front end of the AC drive (as shown in the following figure) to implement the interlock protection function. When the resistor overheats, a tripping fault occurs, avoiding the resistor to be burned.

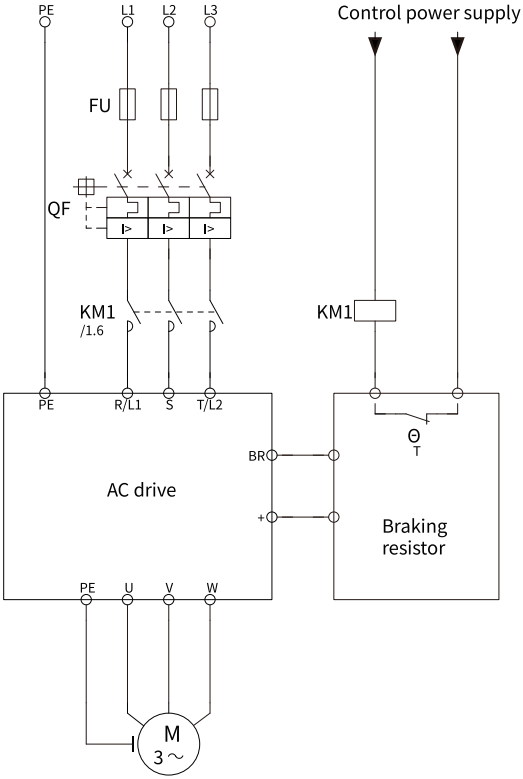

Resistance of braking resistors

During braking, almost all the regenerative energy of the motor is consumed by the braking resistor. The resistance is calculated by the equation:

$$U \times U \div R = Pb$$

Where:

- U indicates the braking voltage at system stable braking. The U value varies with systems. For three-phase 380 VAC to 480 VAC models, the default braking voltage of the AC drive is 760 VDC. For single-phase 200 VAC to 240 VAC models, the default braking voltage of the AC drive is 360 VDC. The braking voltage can be adjusted by parameter F1-02 of the power supply unit.
- Pb: Braking power.

Power of braking resistors

In theory, the power of the braking resistor is the same as the braking power. The following equation can be used:

$$K \times Pr = Pb \times D$$

Where:

- K is set to a value around 50%.
- Pr indicates the power of the braking resistor.
- D: Braking frequency, that is, percentage of the regenerative process to the whole working process.

The following formulas can be generated based on the preceding equations:

$$K \times Pr = Pb \times D = U \times U/R \times D$$
$$Pr = (U \times U \times D)/(R \times K)$$

The braking resistor power Pr can be calculated accordingly.

K is the derating factor of the braking resistor. A low K ensures that the braking resistor does not overheat. You can increase K properly in case of good heat dissipation of the braking resistor. Make sure that K does not exceed 50%. Otherwise, the braking resistor will overheat, which may cause fire.

The braking frequency D is determined based on actual applications. *"Table 4–5 " on page 172* lists the typical values in common applications.

Table 4–5 Typical braking frequencies in different applications

Scenario	Elevator	Winding and unwinding	Centrifugal fan	Occasional braking load	General application
Braking Frequency	20% to 30%	20% to 30%	50% to 60%	5%	10%

Selection of braking components

Power Supply Unit Model	Applicable Motor (kW)	Braking unit		125% Braking Torque (10% ED, Max. 10s)		Notes	Minimum Braking Resistance (Ω)
		Models	Quantity	Recommended Braking Resistor Specification	Quantity of braking resistors		
MD810-20M4T22G1XX	22	Built-in	/	4 kW, 32 Ω	1	/	24
MD810-20M4T45G1XX	45	Built-in	/	9 kW, 13 Ω	1	/	12.8
MD810-20M4T110GXXX	110	MDBUN-200-T	1	16 kW, 2.8 Ω	1	Input voltage ⩽ 440 VAC	2.5
	110	MDBUN-200-5T	1	16 kW, 3.6 Ω	1	Input voltage > 440 VAC	2.8
MD810-20M4T160GXXX(W)	160	MDBUN-200-T	2	16 kW, 2.8 Ω	2	Input voltage ⩽ 440 VAC	2.5 x 2
	160	MDBUN-200-5T	2	16 kW, 3.6 Ω	2	Input voltage > 440 VAC	2.8 x 2

Power Supply Unit Model	Applicable Motor (kW)	Braking unit		125% Braking Torque (10% ED, Max. 10s)		Notes	Minimum Braking Resistance (Ω)
		Models	Quantity	Recommended Braking Resistor Specification	Quantity of braking resistors		
MD810-20M4T355GXXX	355	MDBUN-200-T	3	29 kW, 3.0 Ω	3	Input voltage ⩽ 440 VAC	2.5 x 3
	355	MDBUN-200-5T	3	29 kW, 3.9 Ω	3	Input voltage > 440 VAC	3.0 x 3

Note

The following power supply units do not include the braking function, since they are not equipped with built-in braking units and external braking units are also not recommended. For braking function, select other models.

- MD810-20M4T22G0XX
- MD810-20M4T45G0XX

Dimensions of the braking unit

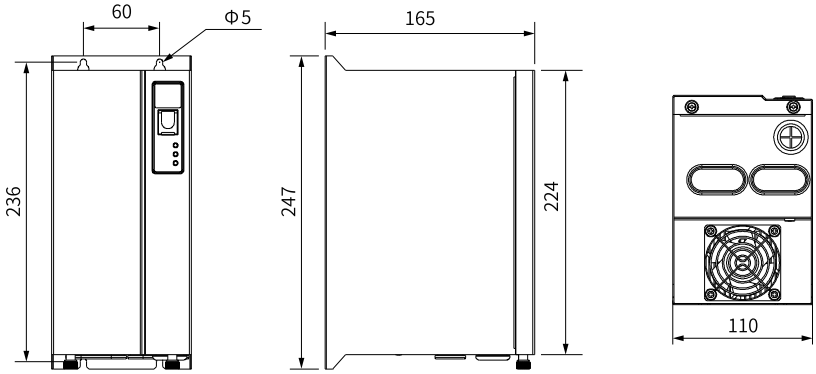

Figure 4-8 Outline dimensions of MDBUN series braking unit (mm)

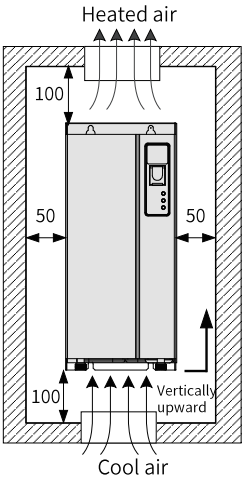

Figure 4-9 Mounting dimensions of MDBUN series braking unit (mm)

4.8 PROFIBUS DP Bus Adapter

The output cable of the PROFIBUS DP bus adapter must be 90° to the ground. SIEMENS 6ES7972-0BB12-0XA0 is recommended, as shown below.

Figure 4-10 Appearance of SIEMENS 6ES7972-0BB12-0XA0

4.9 Peripheral Electrical Components

4.9.1 List of Peripheral Components

Table 4–6 Peripheral components at the power supply unit side

AC Drive Model	Fuse (Bussmann) (UL-Compliant)	EMC Filter Model (Schaffner and Jianli)	AC Input Reactor Model (Inovance)	Contactor Rated Current (A)	Circuit Breaker Rated Current (A)
MD810-20M4T22GXXX	FWH-100Ba	FN 3258-75-34	MD-ACL-60-0.24-4T-2%	65	80
MD810-20M4T45GXXX	FWH-150B	FN 3258-100-35	MD-ACL-120-0.12-4T-2%	150	160
MD810-20M4T110GXXX	FWH-325A	FN 3359-250-28	MD-ACL-250-0.056-4T-2%	205	400
MD810-20M4T160GXXX(W)	FWH-500A	FN 3359-320-99	MD-ACL-330-0.042-4T-2%	300	400
MD810-20M4T355GXXX	170M5016	FN 3359-800-99	MD-ACL-800-0.017-4T-2%	620	800

Table 4–7 Peripheral components at the drive unit side

AC Drive Model	Bus Fuse (Bussmann) (UL-Compliant)		DC Soft Charge Unit Model	DC Circuit Breaker (ABB, with UL Certification)	AC Output Reactor Model (Inovance)	AC Output Reactor Model (Schaffner)
	Models	Quantity				
MD810-50M4T1.5GXXX	FWC-16A10F	1	INOV-SU-30	S804S-UCK40	MD-OCL-5-1.4-4T-1%	RWK 305-4-KL
MD810-50M4T2.2GXXX	FWC-20A10F	1	INOV-SU-30	S804S-UCK40	MD-OCL-7-1.0-4T-1%	RWK 305-7.8-KL
MD810-50M4T3.7GXXX	FWC-16A10F	2			MD-OCL-10-0.7-4T-1%	RWK 305-10-KL
MD810-50M4T5.5GXXX	FWC-20A10F	2			MD-OCL-15-0.47-4T-1%	RWK 305-14-KL
MD810-50M4T7.5GXXX	FWC-25A10F	2			MD-OCL-20-0.35-4T-1%	RWK 305-17-KL
MD810-50M4T11GXXX	FWP-32A14Fa	2	INOV-SU-60	S804S-UCK80	MD-OCL-30-0.23-4T-1%	RWK 305-24-KL
MD810-50M4T15GXXX	FWP-40A14Fa	2			MD-OCL-40-0.18-4T-1%	RWK 305-32-KL
MD810-50M4T18.5GXXX	FWP-50A14Fa	2			MD-OCL-50-0.14-4T-1%	RWK 305-45-KL
MD810-50M4T22GXXX	170M1368	1			MD-OCL-60-0.12-4T-1%	RWK 305-45-KL

AC Drive Model	Bus Fuse (Bussmann) (UL-Compliant)		DC Soft Charge Unit Model	DC Circuit Breaker (ABB, with UL Certification)	AC Output Reactor Model (Inovance)	AC Output Reactor Model (Schaffner)
	Models	Quantity				
MD810-50M4T30GXXX	170M1369	1	INOV-SU-100	S804S-UCK125	MD-OCL-80-0.087-4T-1%	RWK 305-60-KL
MD810-50M4T37GXXX	170M1370	1			MD-OCL-90-0.078-4T-1%	RWK 305-72-KL
MD810-50M4T45GXXX	170M1371	1	INOV-SU-170	T4DCN250TMA 250FF3P	MD-OCL-120-0.058-4T-1%	RWK 305-90-KL
MD810-50M4T55GXXX	170M1372	1			MD-OCL-150-0.047-4T-1%	RWK 305-110-KL
MD810-50M4T75GXXX	170M1370	2			MD-OCL-200-0.035-4T-1%	RWK 305-156-KS
MD810-50M4T90GXXX	FWH-500A	1	/	/	MD-OCL-250-0.028-4T-1%	RWK 305-182-KS
MD810-50M4T110GXXX	FWH-600A	1	/	/	MD-OCL-250-0.028-4T-1%	RWK 305-230-KS
MD810-50M4T132GXXX	FWH-700A	1	/	/	MD-OCL-330-0.021-4T-1%	RWK 305-280-KS
MD810-50M4T160GXXX	FWH-800A	1	/	/	MD-OCL-330-0.021-4T-1%	RWK 305-330-KS
MD810-50M4T200GXXXH	170M6413	2	/	/	MD-OCL-490-0.014-4T-1%	RWK 305-400-S
MD810-50M4T250GXXXH	170M6415	2	/	/	MD-OCL-490-0.014-4T-1%	RWK 305-500-S
MD810-50M4T315GXXXH	170M6416	2	/	/	MD-OCL-660-0.011-4T-1%	RWK 305-600-S
MD810-50M4T355GXXXH	170M6418	2	/	/	MD-OCL-800-0.0087-4T-1%	RWK 305-680-S
MD810-50M4TD1.5GXXX	FWC-16A10F	2	INOV-SU-30	S804S-UCK40	MD-OCL-5-1.4-4T-1%	RWK 305-4-KL
MD810-50M4TD2.2GXXX	FWC-20A10F	2			MD-OCL-7-1.0-4T-1%	RWK 305-7.8-KL
MD810-50M4TD3.7GXXX	FWC-25A10F	2			MD-OCL-10-0.7-4T-1%	RWK 305-10-KL
MD810-50M4TD5.5GXXX	FWC-25A10F	2			MD-OCL-15-0.47-4T-1%	RWK 305-14-KL
MD810-50M4TD7.5GXXX	FWC-32A10F	2	INOV-SU-60	S804S-UCK80	MD-OCL-20-0.35-4T-1%	RWK 305-17-KL
MD810-50M4TD11GXXX	170M1368	1			MD-OCL-30-0.23-4T-1%	RWK 305-24-KL
MD810-50M4TD15GXXX	170M1369	1	INOV-SU-100	S804S-UCK125	MD-OCL-40-0.18-4T-1%	RWK 305-32-KL
MD810-50M4TD18.5GXXX	170M1370	1			MD-OCL-50-0.14-4T-1%	RWK 305-45-KL

4.9.2 Fuse, Contactor, and Circuit Breaker

Power Supply Unit Model	Bussmann Fuse (UL-compliant)		Recommended contactor specifications	Recommended Circuit Breaker Specification
	Rated current (A)	Models	Rated Current (A)	Rated Current (A)
Three-phase 380-480 V, 50 Hz/60 Hz (47-63 Hz)				
MD810-20M4T22GXXX	100	FWH-100Ba	65	80
MD810-20M4T45GXXX	150	FWH-150B	150	160
MD810-20M4T110GXXX	325	FWH-325A	205	400
MD810-20M4T160GXXX(W)	500	FWH-500A	300	400
MD810-20M4T355GXXX	1000	170M5016	620	800

4.9.3 Cable Lug

GTNR series TNR series TNS series

Figure 4-11 Cable lugs manufactured by Suzhou Yuanli Metal Enterprise Co., Ltd.

TNR series cable lugs

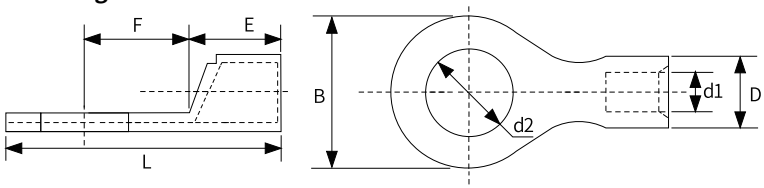

Figure 4-12 Dimensions of TNR series cable lugs

Table 4–8 Models and dimensions of TNR series cable lugs (mm)

Models	Cable Range		D	d1	E	F	B	d2	L	Current (A)	Crimping Tool
	AWG/MCM	mm^2									
TNR0.75-5	22 to 16	0.25–1.0	2.8	1.3	4.5	6.6	8.0	5.3	15	10	RYO-8 AK-1M
TNR1.25-5	22 to 16	0.25 to 1.65	3.4	1.7	4.5	7.3	8.0	5.3	15.8	19	
TNR2-5	16 to 14	1.04 to 2.63	4.0	2.3	4.8	7.25	9.5	5.3	16.8	27	
TNR3.5-5	12 to 10	2.63 to 4.6	5.0	3.2	6.8	8.2	9.5	5.3	20.0	37	RYO-8
TNR3.5-6	12 to 10	2.63 to 4.6	5.0	3.2	6.8	8.5	12.0	6.4	21.4	37	

Models	Cable Range		D	d1	E	F	B	d2	L	Current (A)	Crimping Tool
	AWG/MCM	mm^2									
TNR5.5-5	8	2.63 to 6.64	5.6	3.5	6.8	8.25	9.5	5.3	19.8	48	RYO-8
TNR5.5-6	8	2.63 to 6.64	5.6	3.5	6.8	13.0	12.0	6.4	25.8	48	RYO-14
TNR8-5	8	6.64 to 10.52	7.2	4.5	8.5	9.3	12.0	5.3	23.8	62	RYO-8
TNR8-6	8	6.64 to 10.52	7.2	4.5	8.5	9.3	12.0	6.4	23.8	62	RYO-14 RYO-25

GTNR series cable lugs

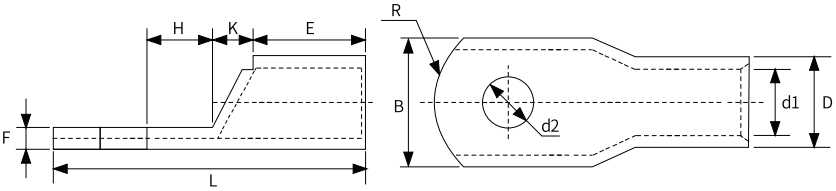

Figure 4-13 Dimensions of GTNR series cable lugs

Table 4–9 Models and dimensions of GTNR series cable lugs (unit: mm)

Models	D	d1	E	H	K	B	d2	F	L	R	Crimping tool
GTNR1.5-5	4.0	2.2	5.0	5.0	2.0	8.0	5.3	1.0	16.0	5.0	RYO-8 YYT-8 RYO-14
GTNR2.5-4	4.5	2.9	7.0	5.0	2.0	8.0	4.3	1.0	18.0		
GTNR2.5-5				6.0			5.3		20.0	7.0	
GTNR2.5-6						10.2	6.4	0.8			
GTNR4-5	5.2	3.6	7.0	6.0	2.0	10.0	5.3	1.0	20.0		
GTNR4-6							6.4				
GTNR6-5	6.0	4.2	9.0	6.0	3.0	10.0	5.3	1.2	23.0		
GTNR6-6				7.5			6.4		26.0		
GTNR6-8						12.0	8.4	1.0			
GTNR10-6	7.0	5.0	9.0	8.0	3.5	12.4	6.4	1.3	26.5		
GTNR10-8							8.4		27.5		
GTNR16-6	7.8	5.8	12.0	8.0	4.0	12.4	6.4	1.3	31.0		CT-38 CT-100
GTNR16-8							8.4				
GTNR25-6	9.5	7.5	12.0	8.0	4.5	14.0	6.4	2.0	32.0	10.0	
GTNR25-8				9.0		15.5	8.4	1.6	34.0		
GTNR25-10				10.5		17.5	10.5	1.4	37.0		
GTNR35-6	11.4	8.6	15.0	9.0	5.0	15.5	6.4	2.8	38.0		
GTNR35-8							8.4				
GTNR35-10				10.5		17.5	10.5	2.5	40.5		
GTNR50-8	12.6	9.6	16.0	11.0	6.0	18.0	8.4	2.8	43.5		CT-100
GTNR50-10							10.5				
GTNR70-8	15.0	12.0	18.0	13.0	7.0	21.0	8.4	2.8	50.0	14.0	
GTNR70-10							10.5				
GTNR70-12							13.0				
GTNR95-10	17.4	13.5	20.0	13.0	9.0	25.0	10.5	3.9	55.0		
GTNR95-12							13				
GTNR120-12	19.8	15.0	22.0	14.0	10.0	28.0	13.0	4.7	60.0	16.0	RYC-150
GTNR120-16				16.0			17.0		64.0		
GTNR150-12	21.2	16.5	26.0	16.0	11.0	30.0	13.0	4.7	69.0	24.0	
GTNR150-16							17.0				
GTNR185-16	23.5	18.5	32.0	17.0	12.0	34.0	17.0	5.0	78.0		
GTNR240-16	26.5	21.5	38.0	20.0	14.0	38.0	17.0	5.5	92.0		
GTNR240-20							21.0				

TNS series cable lugs

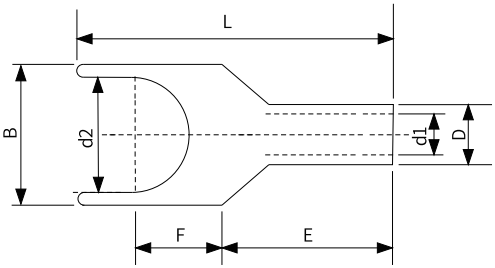

Figure 4-14 Dimensions of TNS series cable lugs

Table 4–10 Model and dimensions of TNS series cable lug (unit: mm)

Models	D	d1	E	F	B	d2	L	Crimping tool
TNS1.25-3	3.4	1.9	4.7	6.5	5.7	3.2	16.0	RYO-8 YYT-8 RYO-14
TNS1.25-3S				6.5	5.7	3.7	16.0	
TNS1.25-3W				6.5	6.2	3.7	16.0	
TNS1.25-4S				6.5	6.4	4.3	16.0	
TNS1.25-4W				6.5	7.2	4.3	16.0	
TNS1.25-5				6.5	8.0	5.3	16.0	
TNS2-3	4.0	2.4	4.7	6.5	5.7	3.2	16.0	
TNS2-3S				6.5	5.7	3.7	16.0	
TNS2-3W				6.5	6.2	3.7	16.0	
TNS2-4S				6.5	6.4	4.3	16.0	
TNS2-4W				6.5	7.2	4.3	16.0	
TNS2-5				6.5	8.0	5.3	16.0	CT-38 CT-100
TNS2-6				9.0	10.7	6.4	20.1	
TNS3.5-4	5.0	3.4	6.4	6.9	8.0	4.3	18.0	
TNS3.5-5				8.0	8.0	5.3	18.0	
TNS5.5-3	5.6	3.6	6.5	7.1	7.3	3.2	19.5	
TNS5.5-3S				7.5	8.2	3.7	19.5	
TNS5.5-4				7.5	8.2	4.3	19.5	
TNS5.5-5				8.0	9.0	5.3	19.5	
TNS5.5-6				12.0	12.0	6.4	26.2	CT-100
TNS8-6	7.0	4.6	8.6	8.5	12.2	6.7	24.0	
TNS14-5	9.3	5.6	10.0	11.0	12.0	5.3	27.5	
TNS14-6				11.0	12.0	6.7	27.5	
TNS22-8	11.3	7.5	12.0	13.0	14.0	8.4	34	

BC series cable lugs

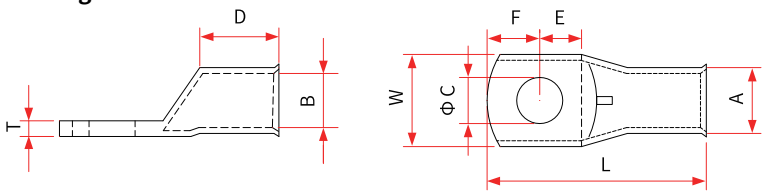

Figure 4-15 Dimensions of BC series cable lugs

Table 4–11 Models and dimensions of BC series cable lugs (mm)

Models	A	B	W	E	D	L	T	C	F
BC50-5	12.1	9.5	17.2	9.7	18.0	46.0	/	5.4	/
BC95-8	17.0	13.5	24.3	12.0	24.0	58.0	/	8.4	/
BC120-8	19.0	15.0	27.2	16.5	27.0	73.0	4.0	8.5	16.5
BC120-10								10.5	
BC120-12								12.8	
BC120-14								14.7	
BC120-16								16.7	
BC120-20				18.8				20.7	14.3
BC150-8	21.0	16.5	30.0	16.5	27.0	78.0	4.5	8.5	16.5
BC150-10								10.5	
BC150-12								12.8	
BC150-14								14.7	
BC150-16								16.7	
BC150-20				18.8				20.7	14.3
BC185-10	23	18.5	33.5	16.5	30	82	4.5	10.5	16.5
BC185-12								12.8	
BC185-14								14.7	
BC185-16								16.7	
BC185-20				18.8				20.7	14.3
BC240-10	26	21	37.7	18.0	32.0	88.0	5.0	10.5	17.0
BC240-12								12.8	
BC240-14								14.7	
BC240-16								16.7	
BC240-20								20.7	
BC300-10	28.0	23.0	41.0	18.0	37.0	97.0	5.0	10.5	17.0
BC300-12								12.8	
BC300-14								14.7	
BC300-16								16.7	
BC300-20								20.7	

TLK series cable lugs

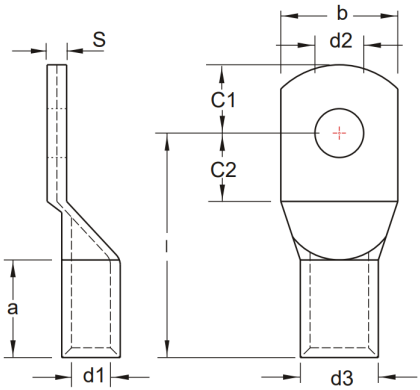

Figure 4-16 Dimensions of TLK series cable lugs

Table 4–12 Models and dimensions of TLK series cable lugs (in mm)

Models	S	a	b	C1	C2	d1	d2	d3	l
TLK2.5-5	1.25	6	8.5	4.7	5.5	2.3	5.3	4.2	14
TLK4-5	-	8	9	4.7	6	3	5.3	5	17
TLK6-5	2.4	9	10	6.5	7.5	3.5	5.5	6.5	21
TLK10-5	1.8	10	12	6.5	7.5	4.6	5.5	7	22
TLK16-5	2.8	13	12	5.5	6.5	5.5	5.5	8.5	26
TLK16-6				6.25	7.5		6.4		27
TLK25-6	2.8	15	14	7.5	7.5	7	6.4	10	30
TLK25-8	2.4		16	10	10		8.4		32
TLK35-6	3.2	17	17	7.5	7.5	8.5	6.4	12	32
TLK35-10	2.9	17	19	12	12		10.5		37
TLK50-10	3.7	19	20	12	12	10	10.5	14	39
TLK70-10	4.3	21	23	12	12	12	10.5	16.5	44
TLK95-8	4.2	25	26	12	12	13.5	8.4	18	48
TLK95-10							10.5		
TLK95-12				13	13	13.5	13	18	49
TLK120-10	4.3	26	28	14	14	15	10.5	19.5	51
TLK150-8	4.3	30	31	14	14	16.5	8.4	21	57
TLK150-10	4.3	30	31	14	14	16.5	10.5	21	57
TLK150-12	4.3	30	31	15	15	16.5	13	21	57
TLK185-10	4.7	30	35	18	18	19	10.5	24	65
TLK240-12	4.8	35	39	21.5	21.5	21	13	26	72
TLK240-16							17	26	72

SQNBS series cable lugs

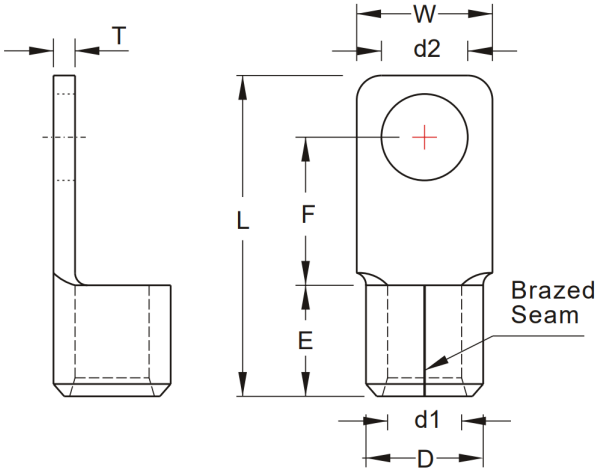

Figure 4-17 Dimensions of SQNBS series cable lugs

Table 4–13 Models and dimensions of SQNBS series cable lugs (in mm)

Models	d2	W	F	L	E	D	d1	T
SQNBS60-6	6.4	16.0	20.0	49.0	18.5	15.5	11.0	2.0
SQNBS100-10	10.5	21.8	21.0	53.0	20.0	22.3	16.4	2.7
SQNBS200-10	10.5	35.5	22.3	72.5	31.0	32.7	24.0	4.0

RNBS series cable lugs

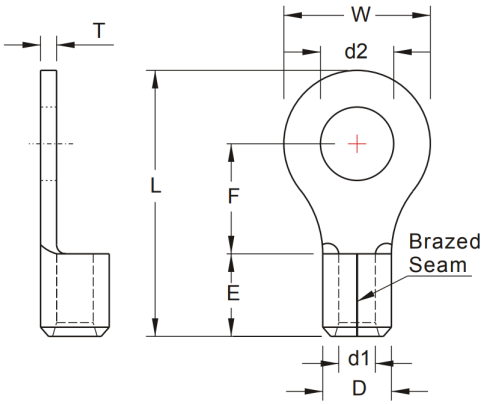

Figure 4-18 Dimensions of RNBS series cable lugs

Table 4–14 Models and dimensions of RNBS series cable lugs (in mm)

Models	d2	W	F	L	E	D	d1	T
RNBS3-5	5.3	8.0	8.0	18.0	6.0	5.1	2.9	1.0
RNBS5-5	5.3	8.8	8.3	19.0	6.0	5.6	3.4	1.0
RNBS22-5	5.3	12.2	15.1	33.2	12.0	11.5	7.7	1.7

4.9.4 Bus fuse

To prevent faults caused by short circuits, prevent further damage to the system, and protect the semiconductor devices of the power supply unit, install a bus fuse between the power supply unit and the drive unit.

Because the 1.5 kW to 75 kW drive unit has a built-in bus fuse, an external bus fuse is not required. For the 90 kW to 355 kW drive unit, install a bus fuse. The following table describes the recommended bus fuse models.

Table 4–15 Selection of bus fuse

Models	Recommended fuse Bussmann (UL-compliant)		
	Rated Current (A)	Models	Quantity
MD810-50M4T1.5GXXX	16	FWC-16A10F	1
MD810-50M4T2.2GXXX	20	FWC-20A10F	1
MD810-50M4T3.7GXXX	16	FWC-16A10F	2
MD810-50M4T5.5GXXX	20	FWC-20A10F	2
MD810-50M4T7.5GXXX	25	FWC-25A10F	2
MD810-50M4T11GXXX	32	FWP-32A14Fa	2
MD810-50M4T15GXXX	40	FWP-40A14Fa	2
MD810-50M4T18.5GXXX	50	FWP-50A14Fa	2
MD810-50M4T22GXXX	125	170M1368	1
MD810-50M4T30GXXX	160	170M1369	1
MD810-50M4T37GXXX	200	170M1370	1
MD810-50M4T45GXXX	250	170M1371	1
MD810-50M4T55GXXX	315	170M1372	1
MD810-50M4T75GXXX	200	170M1370	2
MD810-50M4T90GXXX	500	FWH-500A	1
MD810-50M4T110GXXX	600	FWH-600A	1
MD810-50M4T132GXXX	700	FWH-700A	1
MD810-50M4T160GXXX	800	FWH-800A	1
MD810-50M4T200GXXXH	900	170M6413	2
MD810-50M4T250GXXXH	1100	170M6415	2
MD810-50M4T315GXXXH	1250	170M6416	2
MD810-50M4T355GXXXH	1500	170M6418	2
MD810-50M4TD1.5GXXX	16	FWC-16A10F	2
MD810-50M4TD2.2GXXX	20	FWC-20A10F	2

Models	Recommended fuse Bussmann (UL-compliant)		
	Rated Current (A)	Models	Quantity
MD810-50M4TD3.7GXXX	25	FWC-25A10F	2
MD810-50M4TD5.5GXXX	25	FWC-25A10F	2
MD810-50M4TD7.5GXXX	32	FWC-32A10F	2
MD810-50M4TD11GXXX	125	170M1368	1
MD810-50M4TD15GXXX	160	170M1369	1
MD810-50M4TD18.5GXXX	200	170M1370	1

4.9.5 DC Circuit Breaker

To install a DC soft charge unit, install a DC circuit breaker between the DC soft charge unit and the power supply unit.

Table 4–16 Selection of DC circuit breakers

DC Soft Charge Unit Model	Recommended DC Circuit Breaker (ABB) (UL-Compliant)	
	Rated Current (A)	Models
INOV-SU-30	40	S804S-UCK40
INOV-SU-60	80	S804S-UCK80
INOV-SU-100	125	S804S-UCK125
INOV-SU-170	250	T4DCN250TMA250FF3P

4.9.6 AC Input Reactor

An AC input reactor is an option used to reduce harmonics in the input current. Therefore, when the application has high requirements on harmonic suppression, install an AC reactor. For drive models above 200 kW, ensure that the cabinet has sufficient space for installing the reactor. The following table lists the recommended manufacturer and models of input reactors.

Table 4–17 Recommended AC input reactor models

Power Supply Unit Model	Inovance AC input reactor model
MD810-20M4T22GXXX	MD-ACL-60-0.24-4T-2%
MD810-20M4T45GXXX	MD-ACL-120-0.12-4T-2%
MD810-20M4T110GXXX	MD-ACL-250-0.056-4T-2%
MD810-20M4T160GXXX(W)	MD-ACL-330-0.042-4T-2%
MD810-20M4T355GXXX	MD-ACL-800-0.017-4T-2%

Model Description

The following figure describes the AC Input reactor model.

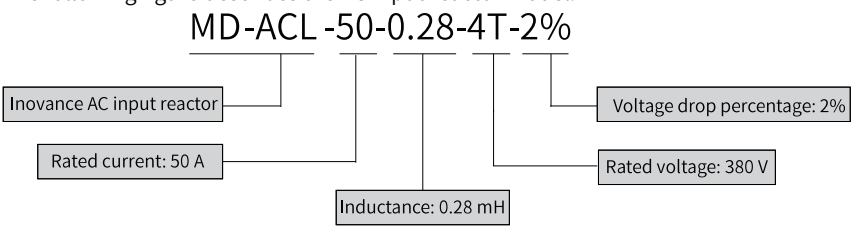

Figure 4-19 Descriptions of the AC Input reactor model

Dimensions

- Dimensions of the AC input reactor (60 A)

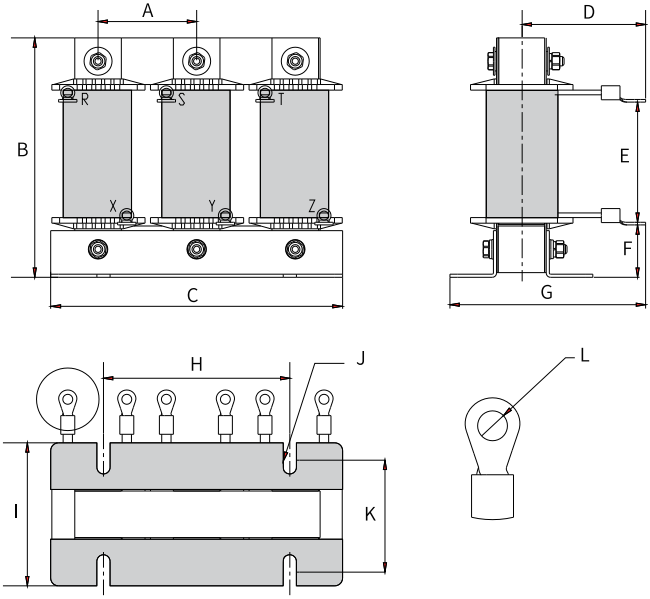

Figure 4-20 Dimensions of the AC input reactor (60 A)

Table 4–18 Dimensions (unit: mm) of the AC input reactor (60 A)

Rated Current (A)	A	B	C	D	E	F	G	H	I	J	K	L
60	64	160	195	80±10	75±5	35±5	135	120±1	92±2	Φ8.5 × 20	72±2	Φ6.4

- Dimensions of the AC input reactor (120 A)

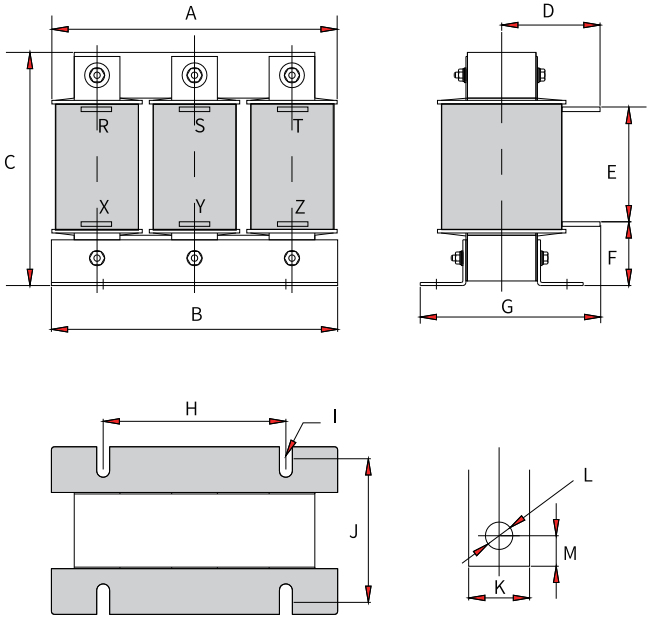

Figure 4-21 Dimensions of the AC input reactor (120 A)

Table 4–19 Dimensions (unit: mm) of the AC input reactor (120 A)

Rated Current (A)	A	B	C	D	E	F	G	H	I	J	K	L	M
120	195	188±1	160	78±10	79±5	40±5	135	120±1	Φ8.5 × 20	92±2	20	Φ9	10

- Dimensions of the AC input reactor (250 A and 330 A)

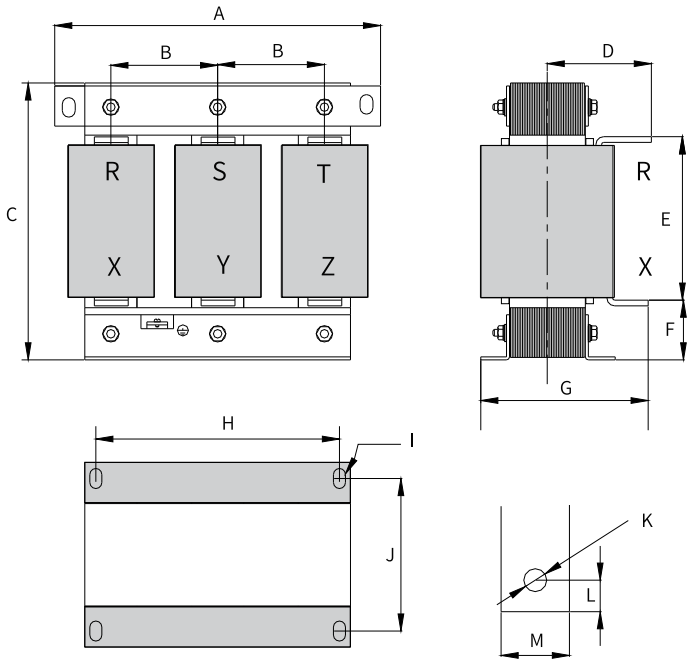

Figure 4-22 Dimensions of the AC input reactor (250 A and 330 A)

Table 4–20 Dimensions (unit: mm) of the AC input reactor (250 A and 330 A)

Rated Current (A)	A	B	C	D	E	F	G	H	I	J	K	L	M
250	250	81±5	260	102±10	160±5	50±5	175	182±1	Φ11×18	96±2	Φ11	13	25
330	290	95±5	275	107±10	160±5	60±5	180	214±1	Φ11×18	100±2	Φ12	15	30

- Dimensions of the AC input reactor (800 A)

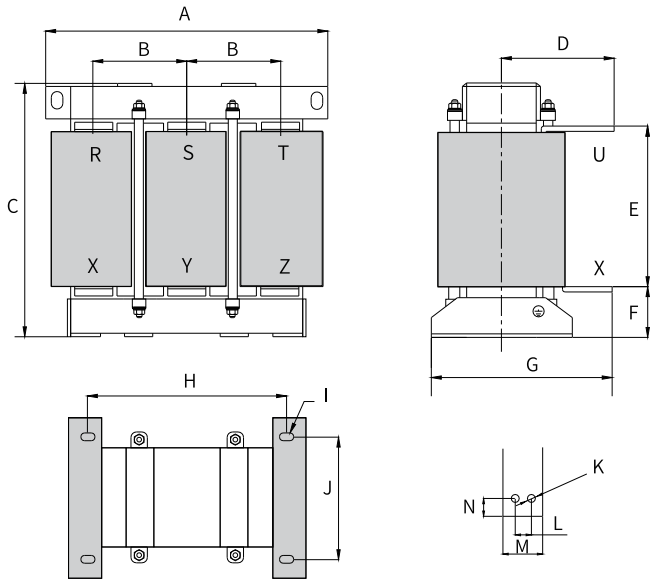

Figure 4-23 Dimensions of the AC input reactor (800 A)

Table 4–21 Dimensions (unit: mm) of the AC input reactor (800 A)

Rated Current (A)	A	B	C	D	E	F	G	H	I	J	K	L	M	N
800	385	123±5	390	142±10	238±5	70±5	250	260±2	Φ12 × 20	175±1	Φ12	22	50	23

4.9.7 AC Output Reactor

The cables connecting the AC drive and motor cannot be too long. Overlong cables cause large distributed capacitance, which may result in high harmonic current. When the cable length is greater than or equal to the recommended value in the following table, install an AC output reactor around the AC drive. Determine whether to install an AC output reactor at the output side of the AC drive according to on-site conditions.

Table 4–22 Minimum cable length for installing AC output reactor

AC Drive Model	Rated Voltage (V)	Min. Cable Length for Optional Output Reactor (m)
MD810-50M4T1.5GXXX	200 to 500	50
MD810-50M4T2.2GXXX	200 to 500	50
MD810-50M4T3.7GXXX	200 to 500	50
MD810-50M4T5.5GXXX	200 to 500	70
MD810-50M4T7.5GXXX	200 to 500	100

AC Drive Model	Rated Voltage (V)	Min. Cable Length for Optional Output Reactor (m)
MD810-50M4T11GXXX	200 to 500	110
MD810-50M4T15GXXX	200 to 500	125
MD810-50M4T18.5GXXX	200 to 500	135
MD810-50M4T22GXXX	200 to 500	150
MD810-50M4T30GXXX	280 to 690	150
MD810-50M4T37GXXX	280 to 690	150
MD810-50M4T45GXXX	280 to 690	150
MD810-50M4T55GXXX	280 to 690	150
MD810-50M4T75GXXX	280 to 690	150
MD810-50M4T90GXXX	280 to 690	150
MD810-50M4T110GXXX	280 to 690	150
MD810-50M4T132GXXX	280 to 690	150
MD810-50M4T160GXXX	280 to 690	150
MD810-50M4T200GXXXH	280 to 690	150
MD810-50M4T250GXXXH	280 to 690	150
MD810-50M4T315GXXXH	280 to 690	150
MD810-50M4T355GXXXH	280 to 690	150
MD810-50M4TD1.5GXXX	200 to 500	50
MD810-50M4TD2.2GXXX	200 to 500	50
MD810-50M4TD3.7GXXX	200 to 500	50
MD810-50M4TD5.5GXXX	200 to 500	70
MD810-50M4TD7.5GXXX	200 to 500	100
MD810-50M4TD11GXXX	200 to 500	110
MD810-50M4TD15GXXX	200 to 500	125
MD810-50M4TD18.5GXXX	200 to 500	135

Model selection (Inovance)

The following figure describes Inovance AC output reactor model.

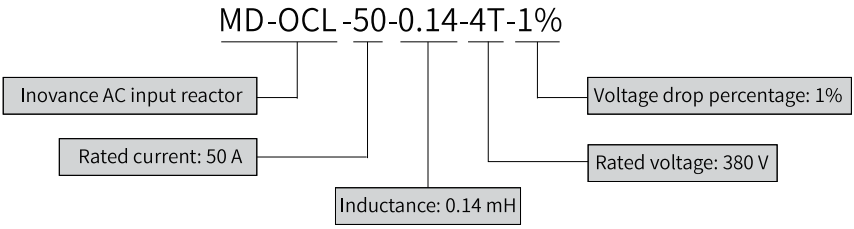

Figure 4-24 Inovance AC output reactor model

The following table describes the recommended models of Inovance AC output reactors.

Table 4–23 Recommended manufacturer and models of the AC output reactor

AC Drive Model	AC Output Reactor Model (Inovance)
MD810-50M4T1.5GXXX	MD-OCL-5-1.4-4T-1%
MD810-50M4T2.2GXXX	MD-OCL-7-1.0-4T-1%
MD810-50M4T3.7GXXX	MD-OCL-10-0.7-4T-1%
MD810-50M4T5.5GXXX	MD-OCL-15-0.47-4T-1%
MD810-50M4T7.5GXXX	MD-OCL-20-0.35-4T-1%
MD810-50M4T11GXXX	MD-OCL-30-0.23-4T-1%
MD810-50M4T15GXXX	MD-OCL-40-0.18-4T-1%
MD810-50M4T18.5GXXX	MD-OCL-50-0.14-4T-1%
MD810-50M4T22GXXX	MD-OCL-60-0.12-4T-1%
MD810-50M4T30GXXX	MD-OCL-80-0.087-4T-1%
MD810-50M4T37GXXX	MD-OCL-90-0.078-4T-1%
MD810-50M4T45GXXX	MD-OCL-120-0.058-4T-1%
MD810-50M4T55GXXX	MD-OCL-150-0.047-4T-1%
MD810-50M4T75GXXX	MD-OCL-200-0.035-4T-1%
MD810-50M4T90GXXX	MD-OCL-250-0.028-4T-1%
MD810-50M4T110GXXX	MD-OCL-250-0.028-4T-1%
MD810-50M4T132GXXX	MD-OCL-330-0.021-4T-1%
MD810-50M4T160GXXX	MD-OCL-330-0.021-4T-1%
MD810-50M4T200GXXXH	MD-OCL-490-0.014-4T-1%
MD810-50M4T250GXXXH	MD-OCL-490-0.014-4T-1%
MD810-50M4T315GXXXH	MD-OCL-660-0.011-4T-1%
MD810-50M4T355GXXXH	MD-OCL-800-0.0087-4T-1%
MD810-50M4TD1.5GXXX	MD-OCL-5-1.4-4T-1%
MD810-50M4TD2.2GXXX	MD-OCL-7-1.0-4T-1%
MD810-50M4TD3.7GXXX	MD-OCL-10-0.7-4T-1%
MD810-50M4TD5.5GXXX	MD-OCL-15-0.47-4T-1%
MD810-50M4TD7.5GXXX	MD-OCL-20-0.35-4T-1%
MD810-50M4TD11GXXX	MD-OCL-30-0.23-4T-1%
MD810-50M4TD15GXXX	MD-OCL-40-0.18-4T-1%
MD810-50M4TD18.5GXXX	MD-OCL-50-0.14-4T-1%

AC output reactor dimensions (Inovance)

- Dimensions of AC output reactors (50 A to 90 A)

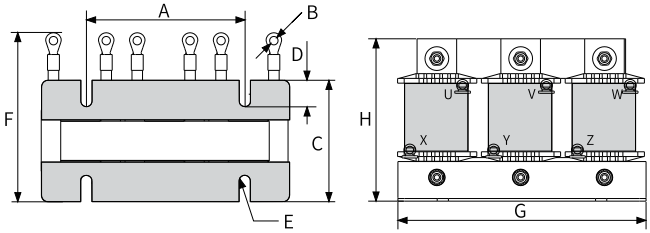

Figure 4-25 Dimensions of AC output reactors (50 A to 90 A)

Rated Current (A)	A (mm)	B (mm)	C (mm)	D (mm)	E (mm)	F (mm)	G (mm)	H (mm)
50	120±1	6 x Φ6.4	92±2	20	4 x Φ8.5	131±10	200	130
60	120±1	6 x Φ6.4	92±2	20	4 x Φ8.5	131±10	200	130
80	120±2	6 x Φ6.4	92±2	20	4 x Φ8.5	125±10	200	165
90	120±2	6 x Φ6.4	92±2	20	4 x Φ8.5	125±10	200	165

- Dimensions of AC output reactor (120 A)

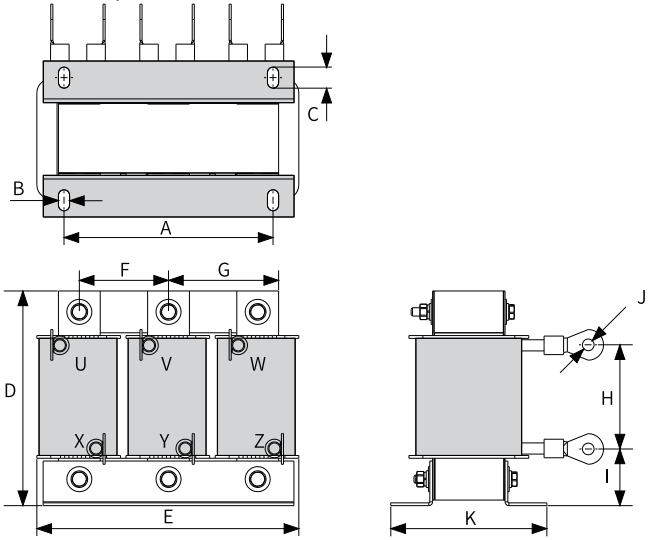

Figure 4-26 Dimensions of AC output reactor (120 A)

Rated Current (A)	A (mm)	B (mm)	C (mm)	D (mm)	E (mm)	F (mm)	G (mm)	H (mm)	I (mm)	J (mm)	K (mm)
120	150±1	8	15	165	195	64	79	75±5	40±5	6 x Φ8.4	165

- Dimensions of AC output reactors (150 A to 250 A)

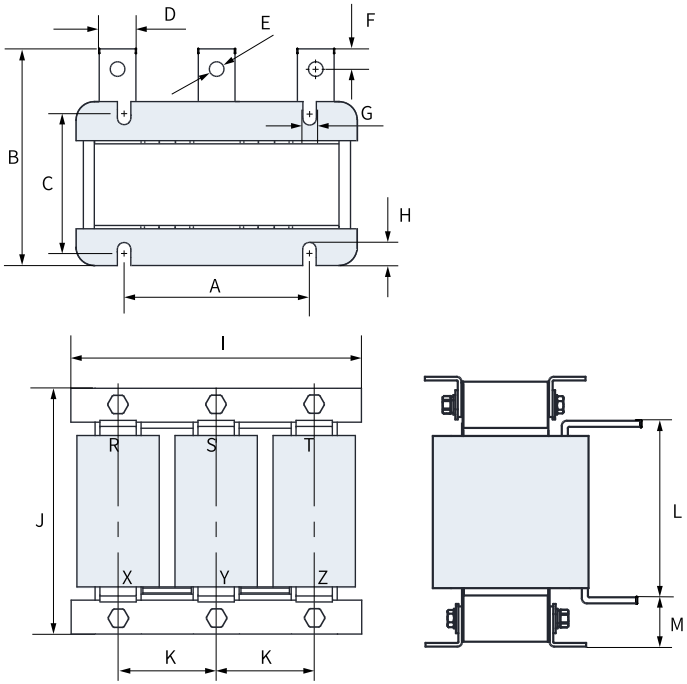

Figure 4-27 Dimensions of AC output reactors (150 A to 250 A)

Rated Current (A)	A (mm)	B (mm)	C (mm)	D (mm)	E (mm)	F (mm)	G (mm)	H (mm)	I (mm)	J (mm)	K (mm)	L (mm)	M (mm)
150	120±1	155	92±2	20	Φ11	10	8.5	20	195	210	64±5	135±5	36±5
200	120±1	165	102±2	20	Φ11	10	8.5	20	195	210	64±5	145±5	30±5
250	120±1	165	102±2	20	Φ11	10	8.5	20	195	210	64±5	143±5	30±5

- Dimensions of AC output reactor (330 A)

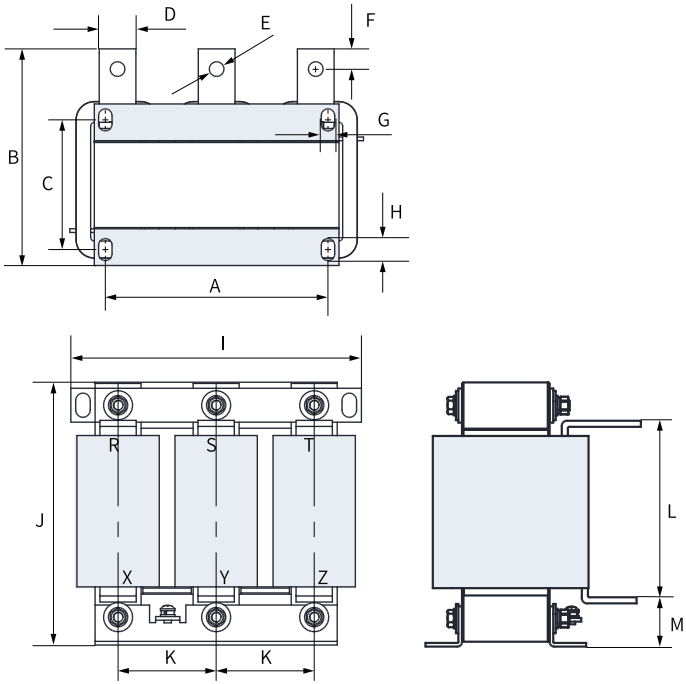

Figure 4-28 Dimensions of AC output reactor (330 A)

Rated Current (A)	A (mm)	B (mm)	C (mm)	D (mm)	E (mm)	F (mm)	G (mm)	H (mm)	I (mm)	J (mm)	K (mm)	L (mm)	M (mm)
330	182±1	175	91±2	30	Φ12	15	11	18	255	240	81±5	155±5	43±5

Model selection (Schaffner)

The following table describes the recommended models of Schaffner AC output reactors.

Table 4–24 Model selection of the AC output reactor (Schaffner)

AC Drive Model	Reactor	Rated Current (A) at 40°C	Rated Power of Standard Motor (kW)	Rated Inductance (mH)	Power Consumption (W)	I/O Selection Terminal			Weight (kg)
MD810-50M4T1.5GXXX	RWK 305-4-KL	4	1.5	1.47	22	KL	/	/	1.2
MD810-50M4T2.2GXXX	RWK 305-7.8-KL	7.8	3	0.754	25	KL	/	/	1.2
MD810-50M4T3.7GXXX	RWK 305-10-KL	10	4	0.588	30	KL	/	/	1.8

AC Drive Model	Reactor	Rated Current (A) at 40°C	Rated Power of Standard Motor (kW)	Rated Inductance (mH)	Power Consumption (W)	I/O Selection Terminal			Weight (kg)
MD810-50M4T5.5GXXX	RWK 305-14-KL	14	5.5	0.42	34	KL	/	/	2.2
MD810-50M4T7.5GXXX	RWK 305-17-KL	17	7.5	0.346	38	KL	/	/	2.5
MD810-50M4T11GXXX	RWK 305-24-KL	24	11	0.245	45	KL	/	/	2.5
MD810-50M4T15GXXX	RWK 305-32-KL	32	15	0.184	55	KL	/	/	3.9
MD810-50M4T18.5GXXX	RWK 305-45-KL	45	18.5	0.131	60	KL	/	/	6.1
MD810-50M4T22GXXX	RWK 305-45-KL	45	22	0.131	60	KL	/	/	6.1
MD810-50M4T30GXXX	RWK 305-60-KL	60	30	0.098	65	KL	/	/	6.1
MD810-50M4T37GXXX	RWK 305-72-KL	72	37	0.082	70	KL	/	/	6.1
MD810-50M4T45GXXX	RWK 305-90-KL	90	45	0.065	75	KL	/	/	7.4
MD810-50M4T55GXXX	RWK 305-110-KL	110	55	0.053	90	KL	/	/	8.2
MD810-50M4T75GXXX	RWK 305-156-KS	156	75	0.038	120	/	KS	/	10.7
MD810-50M4T90GXXX	RWK 305-182-KS	182	90	0.032	140	/	KS	/	16
MD810-50M4T110GXXX	RWK 305-230-KS	230	110	0.026	180	/	KS	/	22
MD810-50M4T132GXXX	RWK 305-280-KS	280	132	0.021	220	/	KS	/	29
MD810-50M4T160GXXX	RWK 305-330-KS	330	160	0.018	240	/	KS	/	32
MD810-50M4T200GXXXH	RWK 305-400-S	400	200	0.015	330	/	/	S	34
MD810-50M4T250GXXXH	RWK 305-500-S	500	250	0.012	340	/	/	S	35
MD810-50M4T315GXXXH	RWK 305-600-S	600	315	0.01	380	/	/	S	37
MD810-50M4T355GXXXH	RWK 305-680-S	680	355	0.009	410	/	/	S	38
MD810-50M4TD1.5GXXX	RWK 305-4-KL	4	1.5	1.47	22	KL	/	/	1.2
MD810-50M4TD2.2GXXX	RWK 305-7.8-KL	7.8	3	0.754	25	KL	/	/	1.2
MD810-50M4TD3.7GXXX	RWK 305-10-KL	10	4	0.588	30	KL	/	/	1.8

AC Drive Model	Reactor	Rated Current (A) at 40°C	Rated Power of Standard Motor (kW)	Rated Inductance (mH)	Power Consumption (W)	I/O Selection Terminal			Weight (kg)
MD810-50M4TD5.5GXXX	RWK 305-14-KL	14	5.5	0.42	34	KL	/	/	2.2
MD810-50M4TD7.5GXXX	RWK 305-17-KL	17	7.5	0.346	38	KL	/	/	2.5
MD810-50M4TD11GXXX	RWK 305-24-KL	24	11	0.245	45	KL	/	/	2.5
MD810-50M4TD15GXXX	RWK 305-32-KL	32	15	0.184	55	KL	/	/	3.9
MD810-50M4TD18.5GXXX	RWK 305-45-KL	45	18.5	0.131	60	KL	/	/	6.1

Dimensions of the AC output reactor (Schaffner)

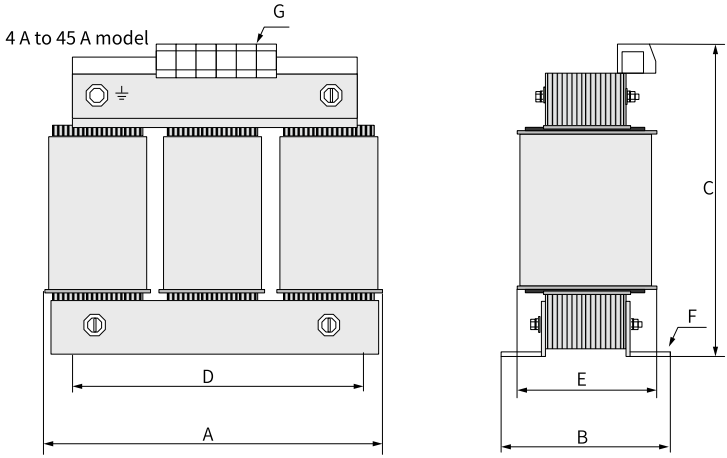

Figure 4-29 Dimensions of the AC output reactors (4 A to 45 A)

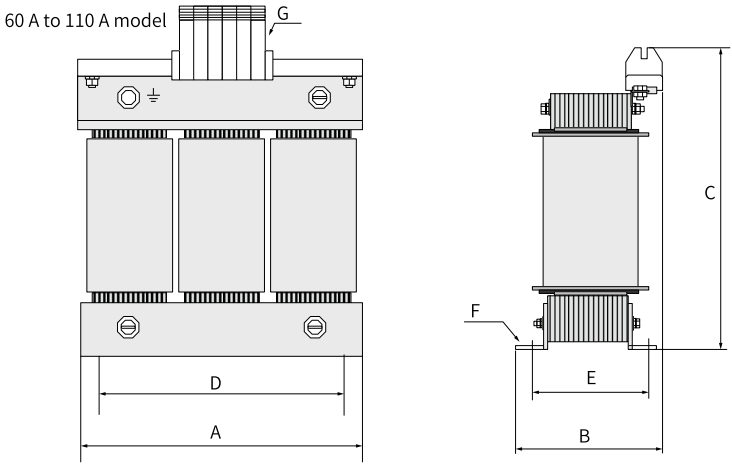

Figure 4-30 Dimensions of the AC output reactor (60 A to 110 A)

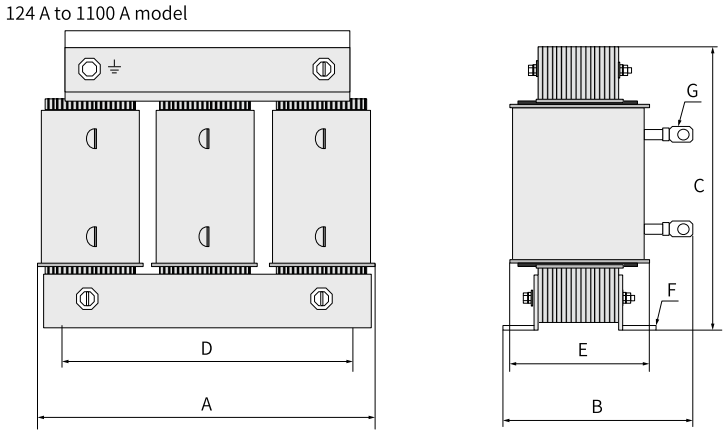

Figure 4-31 Dimensions of the output reactor (124 A to 1100 A)

Table 4–25 Dimensions of the AC output reactor (unit: mm)

Series	A	B	C	D	E	F	G
4 A and 7.8 A	100	max.60	max.115	56	34	4.8 x 9	2.5 mm^2
10 A	100	max.70	max.115	56	43	4.8 x 9	2.5 mm^2
14A	125	max.70	max.135	100	45	5 x 8	2.5 mm^2
17A	125	max.75	max.135	100	55	5 x 8	2.5 mm^2
24A	125	max.75	max.135	100	55	5 x 8	4 mm^2
32A	155	max.95	max.170	130	56	8 x 12	10 mm^2

Series	A	B	C	D	E	F	G
45A	155	max.110	max.190	130	72	8 x 12	10 mm^2
60 A and 72 A	155	max.125	max.190	130	70	8 x 12	16 mm^2
90A	190	max.115	max.225	170	57	8 x 12	35 mm^2
110A	190	max.130	max.220	170	67	8 x 12	35 mm^2
124A	190	max.180	max.160	170	67	8 x 12	Φ8
143 A	190	max.180	max.160	170	77	8 x 12	Φ8
156 A and 170 A	190	max.180	max.160	170	77	8 x 12	Φ10
182 A	210	max.180	max.185	175	97	8 x 12	Φ10
230 A	240	220	/	190	119	11 x 15	Φ12
280 A	240	235	/	190	133	11 x 15	Φ12
330 A	240	240	/	190	135	11 x 15	Φ12
400 A and 500 A	240	220	/	190	119	11 x 15	Φ11
600 A and 680 A	240	230	/	190	128	11 x 15	Φ11
790 A	300	218	/	240	136	11 x 15	Φ11
910 A	300	228	/	240	148	11 x 15	Φ11
1100 A	360	250	/	310	144	11 x 15	Φ11

4.9.8 EMC Filter

The external EMC filter meets the EN 61800-3 C2 emission requirement of CE certification. Connect the filter to ground reliably and ensure that the length of the cable connecting the power supply unit and filter is shorter than 30 cm.

Note

- The length of the cable connecting the power supply unit and the filter must be shorter than 30 cm and as short as short possible. The filter and the power supply unit must be connected to the same ground reference plane, and the filter must be reliably connected to ground. Otherwise, the performance of the filter will be affected.
- The power supply unit with the built-in filter capacitor conforms to European EMC directive 2014/30/ EU and the standard EN 61800-3 C3, and applies to the second environment.

Appearance

Table 4–26 EMC filter models and appearances

Filter Model		Appearance
Schaffner	FN3258 series	
	FN3359 series	
Jianli	/	

Model selection

Schaffner and Jianli filters are recommended, as listed in the following table.

Table 4–27 Recommended manufacturers and models of EMC filters

Power Supply Unit Model	EMC Filter Model (Schaffner)	EMC Filter Model (Jianli)
MD810-20M4T22GXXX	FN 3258-75-34	DL-65EBK5
MD810-20M4T45GXXX	FN 3258-100-35	DL-100EBK5
MD810-20M4T110GXXX	FN 3359-250-28	DL-250EBK5
MD810-20M4T160GXXX(W)	FN 3359-320-99	DL-400EBK3
MD810-20M4T355GXXX	FN 3359-800-99	DL-700EBK3

Dimensions (Schaffner)

- Dimensions of FN 3258 series filters (7 A to 180 A)

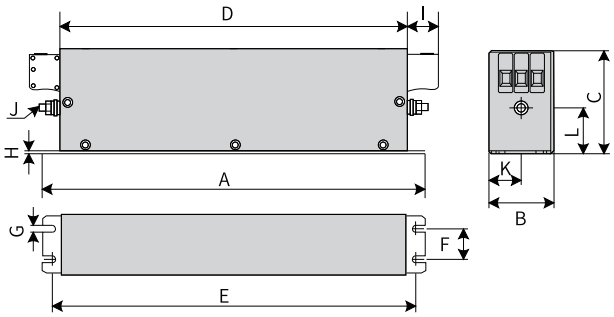

Figure 4-32 Dimensions (unit:mm) of FN 3258 series filters (7 A to 180 A)

Rated Current (A)	A	B	C	D	E	F	G	H	I	J	K	L
7	190	40	70	160	180	20	4.5	1	22	M5	20	29.5
16	250	45	70	220	235	25	5.4	1	22	M5	22.5	29.5
30	270	50	85	240	255	30	5.4	1	25	M5	25	39.5
42	310	50	85	280	295	30	5.4	1	25	M6	25	37.5
55	250	85	90	220	235	60	5.4	1	39	M6	42.5	26.5
75	270	80	135	240	255	60	6.5	1.5	39	M6	40	70.5
100	270	90	150	240	255	65	6.5	1.5	45	M10	45	64
130	270	90	150	240	255	65	6.5	1.5	45	M10	45	64
180	380	120	170	350	365	102	6.5	1.5	51	M10	60	47

- Dimensions of FN 3359 series filters (150 A to 2500 A)

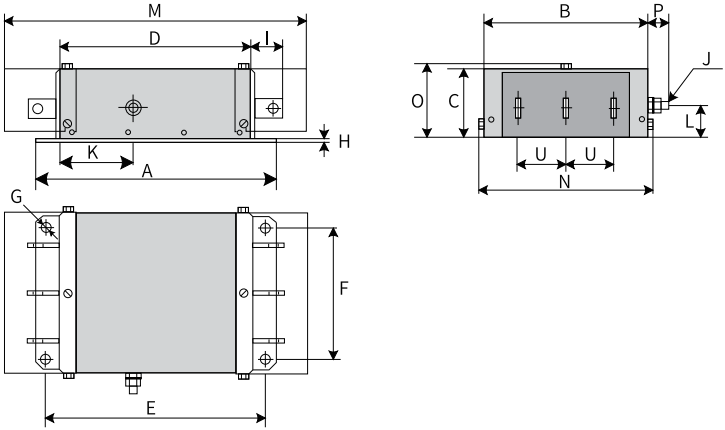

Figure 4-33 Dimensions (unit:mm) of FN 3359 series filters (150 A to 2500 A)

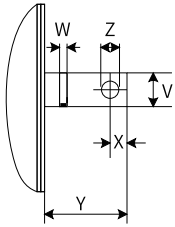

Figure 4-34 Dimensions of grounding copper busbar (unit: mm)

Table 4–28 Dimensions (unit: mm) of FN 3359 series filters (150 A to 2500 A)

Mark	150A	180 A	250 A	320 A	400 A	600 A	800 A	1000 A	1600 A	2500 A
A	300	300	300	300	300	300	350	350	400	600
B	210	210	230	260	260	260	280	280	300	370
C	120	120	125	115	115	135	170	170	160	200
D	160	160	180	210	210	210	230	230	250	300
E	120	120	120	120	120	120	145	145	170	250
F	185	185	205	235	235	235	255	255	275	330
G	ϕ12	ϕ12	ϕ12	ϕ12	ϕ12	ϕ12	ϕ12	ϕ12	ϕ12	ϕ14
H	2	2	2	2	2	2	3	3	3	3
I	33	33	33	43	43	43	53	53	93	98
J	M10	M10	M10	M12	M12	M12	M12	M12	M12	M16
K	55	55	62.5	20	20	20	25	25	25	25
L	30	30	35	20	20	20	25	25	25	25
M	420	420	420	440	440	440	510	510	/	/
N	171	171	191	221	221	221	241	241	/	/
O	127	127	132	122	122	142	177	177	/	/
S	-	-	/	/	/	/	/	/	26	35
T	/	/	/	/	/	/	/	/	26	35
U	50	50	55	60	60	60	60	60	60	100
V	-	-	/	25	25	25	40	40	60	70
W	-	-	/	6	6	8	8	8	10	15
X	/	/	/	15	15	15	20	20	17	20
Y	/	/	/	40	40	40	50	50	90	95
Z	/	/	/	ϕ10.5	ϕ10.5	ϕ10.5	ϕ14	ϕ14	ϕ14	ϕ14

Dimensions (Jianli)

- Dimensions of Jianli series filters (25 A to 200 A)

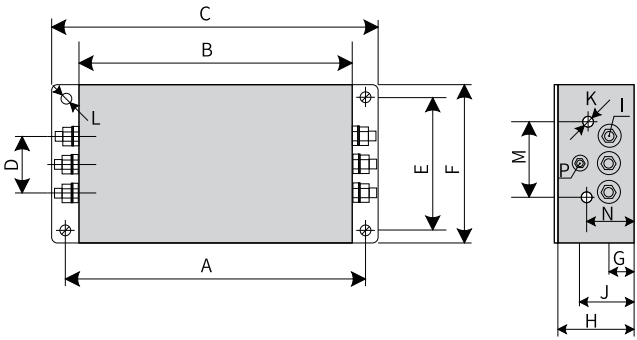

Figure 4-35 Dimensions (unit: mm) of Jianli filters (25 A to 200 A)

Table 4–29 Dimensions (unit: mm) of Jianli filters (25 A to 200 A)

Models	A	B	C	D	E	F	G	H	I	J	K	M	N	P	L
DL-25EBK5	243	224	265	58	70	102	25	92	M6	58	M4	74	49	M6	6.4 x 9.4
DL-35EBK5															
DL-50EBK5															
DL-65EBK5															
DL-80EBK5	354	323	388	66	155	188	30	92	M8	62	M4	86	56	M8	6.4 x 9.4
DL-100EBK5															
DL-130EBK5															
DL-160EBK5															
DL-200EBK5															

- Dimensions of Jianli series filters (250 A to 800 A)

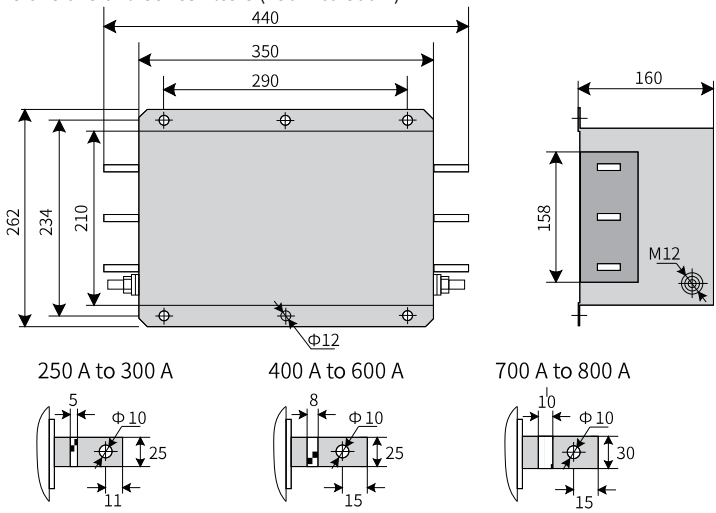

Figure 4-36 Dimensions (unit: mm) of Jianli filters (250 A to 800 A)

- Dimensions of Jianli series filter (1000 A)

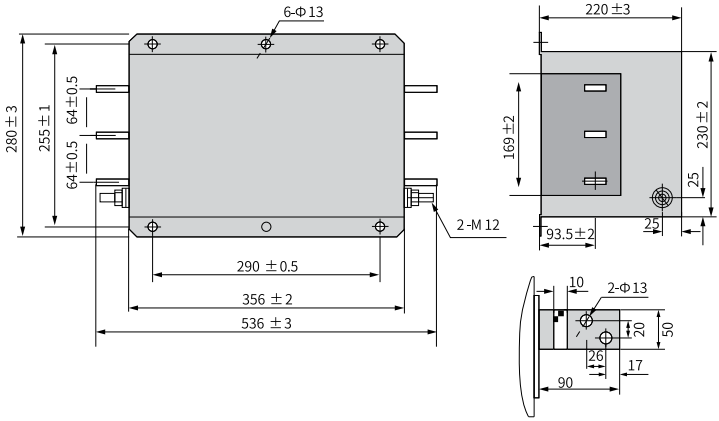

Figure 4-37 Dimensions (unit: mm) of Jianli series filter (1000 A)

4.9.9 Simple Filter

The simple EMC filter effectively attenuates radio frequency noise from the power grid and running AC drive. In addition, for devices equipped with the earth leakage circuit breaker (ELCB), if the ELCB trips incorrectly, install a simple filter on the input side of the AC drive for suppression. For details, see *"Figure 4–39 " on page 204* .

Ground the simple filter reliably and ensure that the cable connecting the filter and the controller is shorter than 30 cm. The grounding terminal of the simple filter must be connected to that of the drive, and the grounding cable must be as short as possible (shorter than 30 cm).

Dimensions

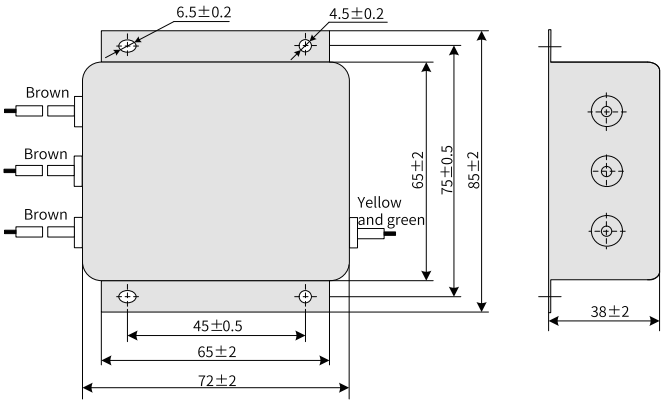

Figure 4-38 Outline dimensions of the simple filter (unit: mm)

Table 4–30 Outline dimensions of the simple filter

Models	Code	Outline Dimension (Width × Depth x Height) (unit: mm)	Mounting Dimensions (Width x Depth) (unit: mm)
Cxy-1-1	11025018	85 x 72 x 38	45 x 75

Mounting method

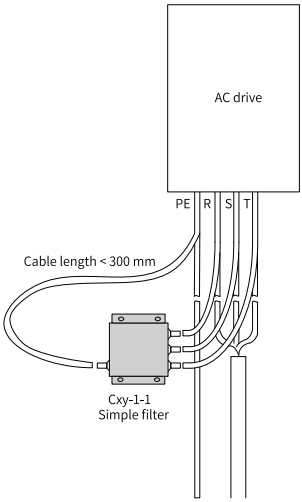

Figure 4-39 Simple filter installation

4.9.10Magnetic Ring and Ferrite Clamp

Model

The magnetic ring is mainly used on the input side or output side of the drive. Install it as close to the AC drive as possible. A magnetic ring on the input side suppresses noise in the AC drive input power supply system. A magnetic ring on the output side is mainly used to reduce the external interference of the drive and reduce the bearing current.

For leakage current and other signal cable interference problems, magnetic rings or Ferrite clamps can be used.

- Amorphous magnetic ring: It features high permeability when the frequency is equal to or lower than 1 MHz and excellent suppression performance on interference generated by the AC drive. However, its cost is relatively high.
- Ferrite clamp: It can reduce noise of various signal cables when the frequency is higher than 1 MHz. In addition, it is cost-effective and easy to install.

Table 4–31 Appearance and model of the magnetic ring and ferrite clamp

Type	Model	Appearance
Magnetic ring	DY644020H	
	DY805020H	
	DY1207030H	
Ferrite clamp	DYR-130-B	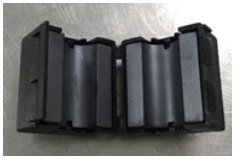

Dimensions

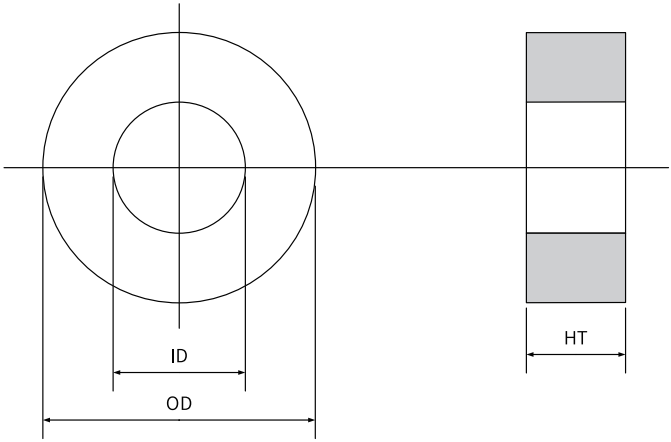

Figure 4-40 Dimensions of the magnetic ring

Table 4–32 Dimensions of the magnetic ring

Model	Dimension (OD x ID x HT) (mm)
DY644020H	64 x 40 x 20
DY805020H	80 x 50 x 20
DY1207030H	120 x 70 x 30

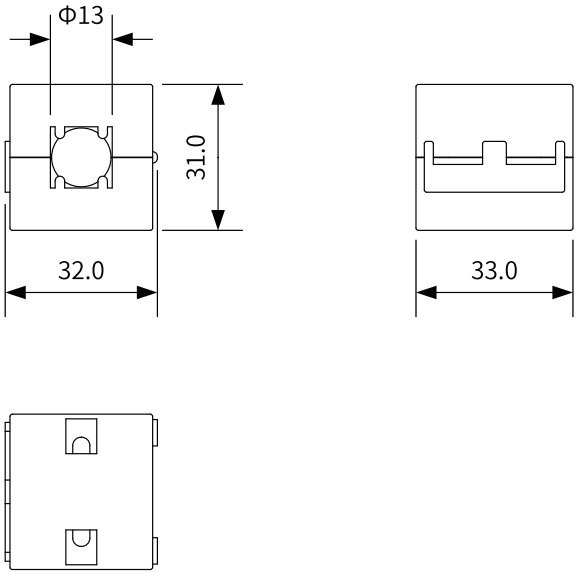

Figure 4-41 Dimensions of the ferrite clamp (unit: mm)

Table 4–33 Dimensions of the ferrite clamp

Model	Dimensions (L × OD × ID) (mm)
74271225	32.8 x 28 x 13

Installation

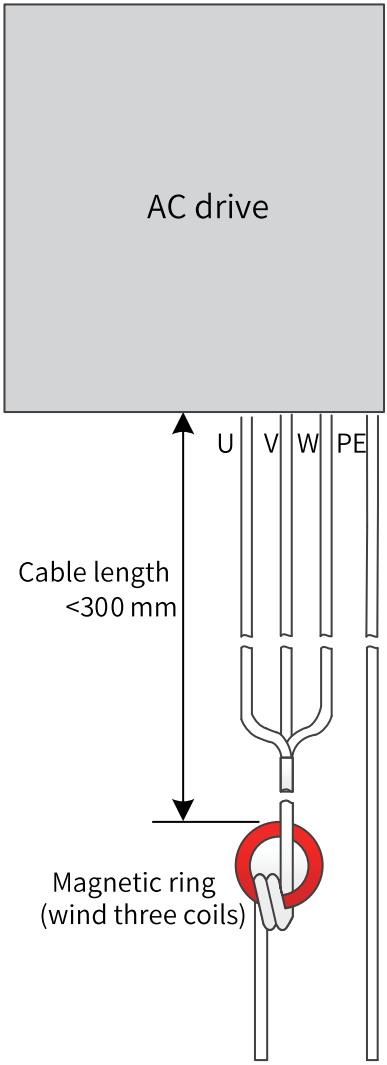

Figure 4-42 Installing the magnetic ring

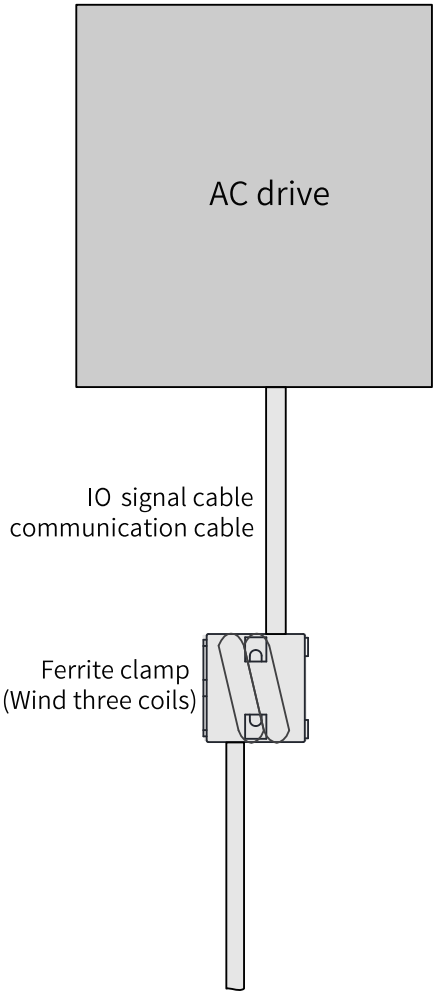

Figure 4-43 Installing the ferrite clamp

5 Solutions to Common EMC Problems

5.1 Residual Current Device Malfunction

Select a residual current device (RCD) according to the following requirements:

- The AC drive will generate certain high-frequency leakage current during operation. To avoid malfunction of the RCD, select a RCD with the action current of at least 100 mA for each AC drive.
- When multiple AC drives connected in parallel share one RCD, the operating current of the RCD must be not lower than 300 mA.
- Use recommended RCD brands like CHINT and SCHNEIDER.

When the RCD malfunctions, perform troubleshooting according to the following table.

Table 5–1 Solution for leakage current

Tripping	Possible Cause	Step
Trip upon power-on	1. The anti-interference performance of the RCD is poor. 2. The tripping current of the RCD is too low. 3. An unbalanced load is connected to the rear end of the RCD. 4. The capacitance to the ground at the front end of the AC drive is large.	1. Use a RCD of a recommended brand. 2. Use a RCD with a higher tripping current. 3. Move the unbalanced load to the front end of the RCD. 4. If an EMC filter unit is installed, disconnect the EMC screws. 5. If an EMC filter is installed, disconnect the EMC filter.
The RCD trips during operation.	1. The anti-interference performance of the RCD is poor. 2. The tripping current of the RCD is too low. 3. An unbalanced load is connected to the rear end of the RCD. 4. For motor cables and the motor, the distributed capacitance to ground is too high.	1. Use a RCD of a recommended brand. 2. Install an EMC filter unit or EMC filter. 3. Install a simple filter on the input side of the drive, and wind LN and RST cables through the magnetic ring near the RCD. 4. Use a RCD with a higher rated tripping current. 5. Reduce the carrier frequency while ensuring performance. 6. Use shorter motor cables.

5.2 Harmonic Suppression

To suppress high-order harmonics of the drive and improve the power factor, install an input reactor on the input side of the AC drive to meet standard requirements.

5.3 Common I/O Signal Interference

The AC drive generates strong interference during operation, which may interfere with other devices due to improper cabling or grounding. When the AC drive disturbs or is disturbed by other devices, adopt the following measures.

Step Sequence	Step
1	Use shielded I/O signal cables with the shield connected to the PE terminal.
2	Connect the PE terminal of the motor to that of the AC drive, and connect the PE terminal of the AC drive to that of the power grid.
3	Add an equipotential ground cable between the host controller and the AC drive.
4	Install a magnetic ring to the U, V, and W output cables at the drive side and wind the cables through the magnetic ring for two to four turns.
5	Increase the capacitor filter at the low-speed DI. The recommended maximum value is 0.1 uF. The required capacitor voltage withstanding level is 50 V or above.
6	Increase the capacitor filter at the AI. The recommended maximum value is 0.22 uF. The required capacitor voltage withstanding level is 50 V or above.
7	Install a ferrite clamp or a magnetic ring to the signal cable and wind the signal cable through the magnetic ring for one to two turns.
8	Use shielded power cables and ground the shield properly.
9	Remove the grounding screw on the control board. For details, see . *"3.11.1 Grounding the Control Board" on page 159*

5.4 Communication Interference

5.4.1 RS485 and CAN Communication Interference

In the case of interference, take the following rectification measures.

Step	Solution
1	Install a 120 Ω termination resistor at both ends of the bus.
2	Use multi-conductor shielded twisted pair cables and ground the shield at both ends.
3	Separate communication cables from power cables with a distance of at least 30 cm.

Step	Solution
4	Adopt the daisy chain mode for multi-node communication.
5	For multi-node communication, add an equipotential bonding grounding cable between nodes.
6	Add a ferrite clamp at both ends of the communication cable or add a magnetic ring at both ends of the communication cable and wind the communication cable through the magnetic ring for one to two turns.
7	Install a magnetic ring to the U, V, and W output cables at the drive side and wind the cables through the magnetic ring for two to four turns.
8	Use a shielded power cable and properly ground its shield.

5.4.2 EtherCAT, PROFINET and EtherNet/IP Communication Interference

Observe the following steps for troubleshooting.

No.	Step
1	Ensure the communication cable is a shielded Cat 5e cable.
2	Ensure communication ports are tight and in good contact.
3	Separate communication cables from power cables with a distance of at least 30 cm.
4	Install extra equipotential bonding grounding cables among the nodes in case of multi-node communication.
5	Check that the cable between two nodes is no longer than 100 m in length.
6	Install the ferrite clamp on both sides of the communication cable and wind the cable around the ferrite clamp by one or two turns.
7	Install a magnetic ring to the U, V, and W output cables at the drive side and wind the cables through the magnetic ring for two to four turns.
8	Use shielded power cables and ground the shield properly.
9	Install the EtherCAT, PROFINET, or Ethernet/IP communication expansion card to optional expansion card slot 2.

6 Certification and Standard Requirements

6.1 Certifications, Directives, and Standards

The following table lists the certifications, directives, and standards that the product may comply with. For details about the acquired certificates, see the certification marks on the product nameplate.

Certification Name	Directive Name		Standards compliance
CE Certification	EMC directive	2014/30/EU	EN IEC 61800-3
	LVD directive	2014/35/EU	EN 61800-5-1
	RoHS	2011/65/EU	EN 50581
UL/cUL certification	/		UL61800-5-1 C22.2 No.274-17
Safe Torque Off (STO) function	Machinery Directive	2006/42/EC	EN 61800-5-2 EN 62061:2005/A2 EN ISO 13849-1 EN 61508 ed.2
KC Certification	Korea radio law		KN 11

Note

The CE/UL/cUL certification of the product conforms to the latest versions of the above-mentioned directives and standards.

6.2 CE Certification

6.2.1 Precautions for Compliance with European Standards

Figure 6-1 CE mark

- The CE mark indicates compliance with the Low Voltage Directive (LVD), Electromagnetic Compatibility (EMC), and Restriction of Hazardous Substances (RoHS) directives for commercial trades (production, import, and sales) in Europe.

- The CE mark is mandatory for engaging in commercial business (production, importation, and distribution) in Europe.
- This product is labeled with CE mark, compliant with Low Voltage Directive (LVD), Electromagnetic Compatibility (EMC) Directive and Environmental Protection (RoHS) Directive.
- The machinery and devices equipped with this product must also meet CE requirements when sold in Europe.
- The integrator who integrates this AC drive into other products and attaches CE mark to the final assembly has the responsibility of ensuring compliance with CE certification.

6.2.2 Requirements for Compliance with EMC

- The drive is applicable to the first environment and second environment and complies with EMC directive 2014/30/EU and standard EN IEC 61800-3.

Caution

When applied in First Environment, this product may generate radio interference. Besides the CE compliance described in this chapter, take measures to avoid interference if required.

- To enable the drive to comply with the EMC directive and standards, install an EMC filter on the input side and use shielded cables on the output side. Ensure the filter is grounded properly and the shield of the output cable is grounded 360 degrees.

Caution

The manufacturer of the system with the product installed must ensure that the system meets the requirements of the European EMC Directive, and ensure that the system meets the requirements of the standard EN IEC 61800-3 according to the application environment of the system.

EMC specifications

The drive complies with EN IEC 61800-3. The maximum length of the motor cable allowed by the conducted and radiated emission is shown in the following table.

Table 6–1 Maximum Cable Length Allowed by Conducted and Radiated Emission

Product model	Maximum cable length allowed for conducted interference				Maximum cable length allowed for radiated interference			
	Category C2		Category C3		Category C2		Category C3	
	Built-in Filter	External EMC Filter	Built-in filter	External EMC Filter	Built-in filter	External EMC Filter	Built-in filter	External EMC Filter
MD810-20M4T22GXXX MD810-20M4T45GXXX MD810-20M4T110GXXX MD810-20M4T160GXXX MD810-20M4T355GXXX	-	3 m	3 m	/	/	3 m	3 m	/

Introduction to EMC standards:

Electromagnetic compatibility (EMC) describes the ability of electronic and electrical devices or systems to work properly in the electromagnetic environment and not to generate electromagnetic interference that influences other local devices or systems. EMC includes the following requirements:

- The electromagnetic interference produced by the equipment during a normal operation in its environment shall not exceed certain limit.
- The device must have sufficient immunity to electromagnetic interference in the environment and can work properly in the environment with electromagnetic interference, which is described as electromagnetic sensitivity.

EN IEC 61800-3 defines the following two environments:

- First environment: It includes domestic premises. It also includes establishments directly connected without intermediate transformer to a low-voltage power supply network which supplies buildings used for domestic purposes.
- Second environment: It includes all establishments other than those directly connected to a low-voltage power supply network which supplies buildings used for domestic purposes.

Four categories fit within the two environments:

- Category C1 equipment: Power drive system (PDS) of rated voltage less than 1000 V, intended for use in the First Environment.
- Category C2 equipment: PDS of rated voltage less than 1000 V, which is hardwired and, when used in the first environment, is intended to be installed and commissioned only by a professional.
- Category C3 equipment: PDS of rated voltage less than 1000 V, intended for use in the Second Environment only and not the First Environment.
- Category C4 equipment: PDS of rated voltage greater than or equal to 1000 V, or rated current greater than or equal to 400 A, or intended for use in complex systems in the Second Environment.

6.2.3 Requirements for Compliance with LVD

This product has been tested according to EN61800-5-1, and it complies with the Low Voltage Directive. Observe the following requirements to enable machines and devices integrated with this drive to comply with the LVD.

Installation location

Install the AC drive in a place with the pollution degree of 2 or below and overvoltage category III as specified in IEC 606641.

Installation environment

For installation environment requirements, see the section of Installation Environment in *MD810 Series AC Drive (Multidrive System) Installation Guide*.

Protection requirements

- The drive serves as a part of a final system. Install the drive as the system component in a fireproof cabinet that provides effective electrical and mechanical protection, and install it in accordance with local laws and regulations and relevant IEC standards.
- Drives (IP20) intended to be installed inside the cabinet must be installed in a structure that prevents intrusion of unwanted objects from the top and the front.

Wiring of main circuit terminals

For details, see *"3.3 Wiring Descriptions of Main Circuit Terminals" on page 69*.

Protective devices

To comply with EN 61800-5-1 standards, install a fuse/circuit breaker on the input side of the drive to prevent accidents caused by short circuit in the internal circuit. For details about the selection of the fuse/circuit breaker, see *"4.9.2 Fuse, Contactor, and Circuit Breaker" on page 177*.

6.3 UL or cUL Certification

Figure 6-2 UL/cUL mark

- The UL/cUL mark is commonly applied to products sold in the United States and Canada. Products with UL/cUL mark have been inspected and assessed by the UL organization. To pass UL/cUL certification, main built-in components of electrical products must also be UL certified.

- The drive has been tested in accordance with UL 61800–5–1 and CSA C22.2 No. 100-14 standard to determine compliance with UL/cUL standards. Observe the following requirements to enable machines and devices integrated with this drive to comply with UL/cUL standards.

Installation location

Install the drive in a place with overvoltage category III and pollution degree 1 or 2 as specified by UL61800–5–1.

Ambient temperature

According to the protection level, the ambient temperature must be maintained within the following range:

–10°C to 50°C for open type products

Installation requirements

As an open type product, the drive is installed in a cabinet. Its installation requirements are as follows:

The AC drive must be installed in a fireproof cabinet with doors that provide effective electrical and mechanical protection. The installation must conform to local and regional laws and regulations and relevant NEC standards.

Main circuit wiring requirements

Caution

Field installation is not allowed for output terminals BR, (-), and (+).

- Terminals BR and (+) are used to connect options. Avoid connecting these terminals to an AC power supply.
- To protect the main circuit, separate it from all surfaces that may come into contact with it and provide covers as required.
- The control circuit is a safety extra-low voltage (SELV) circuit, which must be isolated from other circuits through reinforced insulation. Make sure that the control circuit is connected to an external SELV circuit.
- Prevent foreign objects from entering the wiring part of the terminal block.
- Avoid welding when using stranded wires.
- Tightening torque required by terminals may vary. Tighten the screws in accordance with applicable requirements. Use screwdrivers, ratchets, or wrenches as appropriate.
- When using an electric tool to tighten the terminal screws, set the tool to a low speed to avoid damage to the terminal screws.

- Tighten the terminal screws with an angle not higher than 5°. Failure to comply may damage the terminal screws.

Control circuit wiring requirements

Observe the requirements in UL508 during wiring.

Main circuit cable selection

For the selection of cable dimensions, follow the requirements of US National Electrical Code (NEC) and Part 1 of Canadian Electrical Code (CEC) and relevant local regulations.

- Use cables with copper conductors.
- The recommended cables for the main circuit are 600 V Class 2 heat-resistant indoor PVC cables that can work under temperature of 75°C continuously. The following conditions are used as premises:

  1. Ambient temperature: < 40°C
  2. Normal operating ratings

If recommended cables for peripheral devices or options are not suitable for the product, contact Inovance.

Cable selection

See details in *"3.4 Main Circuit Cable Selection" on page 72*.

Protective fuse

- To meet the requirements of UL standards, install a fuse/circuit breaker on the input side of the drive to prevent accidents caused by short circuit in the internal circuit.
- Install sufficient protective devices against short circuit in branch circuits according to applicable regulations and this guide. This product is suitable for circuits with a short circuit current lower than 100 kA, and the maximum voltage of 480 VAC (400 V). For details about the selection of the fuse/circuit breaker, see *"4.9.2 Fuse, Contactor, and Circuit Breaker" on page 177*.

6.4 KC Certification

Appllicant Suzhou Inovance Technology Co., Ltd.
AC Drive
Model MD800 series
Made In China
Manufacturer
Suzhou Inovance Technology Co.,Ltd.

A급기기 (업무용 방송통신기자재)
이 기기는 업무용(A급) 전자파적합기기로서 판매자 또는 사용자는 이 점을 주의하시기 바라며,가정외의 지역에서 사용하는 것을 목적으로 합니다.

Appendix Requirements for Coolant and Circulation System of Water-Cooled Models

Requirements on the radiator and pipes

- The SS304 stainless steel or PE plastic radiator is recommended. Iron radiators are prone to rust, lowering the water quality; therefore, iron radiators are not allowed.
- Carbon steel and cast iron pipes are not allowed. SS304 stainless steel, PVC, PPR pipes are recommended as the hard pipes. EPDM rubber, PU, and PE pipes are recommended as the soft pipes.
- Note that the pipes must be connected properly to prevent leakage. Generally, soldering, thread+sealing ring connection, splicing, and gluing are used for connecting hard pipes. For soft pipes, hose clamp connection and thread+sealing ring connection are used. After the pipes are connected for the first time, a pressure test must be performed to ensure that leakage does not occur.

Usage requirements on the coolant

- Deionized water (purified water or vehicle antifreeze) must be used as the coolant, and the coolant must be circulated and isolated.
- A pressure relief device (such as a relief valve) is required for the cooling circuit to lower the water pressure. The operating water pressure must be lower than or equal to 0.6 MPa.
- If the purified water is used as the coolant, the preservative must be added to the purified water. If the minimum ambient temperature in winter is lower than the freezing point, use the antifreeze. It is recommended to use water solution of ethylene glycol.
- If the AC drive is stopped for more than two days, exhaust all water in the heatsink by applying 0.3 to 0.5 MPa air to the water inlet for 5 to 10 minutes with the water outlet opened.
- Check that the water cooled heatsink is watertight and meets protection requirements.
- Generally, the coolant flow at the inlet of the water cooled heatsink shall be no less than 16 L/min.
- The following table describes the water inlet temperature of the water cooled heatsink. When the water temperature is lower than the minimum water temperature listed in the following table, condensation may occur, and there may be a risk of AC drive damage.

Note

If the ambient temperature and humidity of the AC drive is out of the range listed in the following table, the water temperature shall follow the requirements of the adjacent higher temperature and humidity values. For example, if the ambient temperature and humidity of the AC drive is 32°C and 75%, respectively, the recommended water inlet temperature is 31°C to 45°C (corresponding to ambient temperature: 35°C and humidity: 80%).

Ambient condition of AC drive		Water inlet temperature	
Temperature	Humidity	Minimum water temperature	Maximum water temperature
25	60%	16.7°C	45°C
	70%	19.1°C	45°C
	80%	21.3°C	45°C
	90%	23.2°C	45°C
	95%	24.1°C	45°C
28	60%	19.5°C	45°C
	70%	22.0°C	45°C
	80%	24.2°C	45°C
	90%	26.2°C	45°C
	95%	27.1°C	45°C
30	60%	21.4°C	45°C
	70%	23.9°C	45°C
	80%	26.2°C	45°C
	90%	28.2°C	45°C
	95%	29.1°C	45°C
35	60%	26.1°C	45°C
	70%	28.7°C	45°C
	80%	31°C	45°C
	90%	33.1°C	45°C
	95%	34.1°C	45°C
40	40%	23.8°C	45°C
	50%	27.6°C	45°C
	60%	30.7°C	45°C
	70%	33.5°C	45°C

Requirements on the purified water and selection of the preservative and antifreeze

- Requirements on the purified water

Table –2 Requirements on the purified water

Indicator	Unit	Value
PH value	/	6 to 8
Hardness	°dH	< 10
Conductivity	μS/cm	< 10
Chloride	mg/l	< 10
Iron	mg/l	< 0.1
Maximum particle size	μm	< 300

- Preservative: Add 0.03% to 0.05% sodium metasilicate to prevent corrosion of the aluminum parts.
- Antifreeze: It is recommended to use antifreeze containing anti-corrosion and corrosion inhibitors. Generally, the freezing point of the antifreeze must be 10°C to 15°C lower than the lowest ambient temperature where the drive is used. For example, if the lowest ambient temperature is -30°C, the freezing point of the antifreeze must be lower than -45°C.

Table –3 Relationship between the ethylene glycol concentrations and freezing points

Freezing Point (°C)	Ethylene Glycol Concentration	Density (20°C) mg/cm^3
-10	28.4	1.0340
-15	32.8	1.0426
-20	38.5	1.0506
-25	45.3	1.0586
-30	47.8	1.0627
-35	50.0	1.0671
-40	54.0	1.0713
-45	57.0	1.0746
-50	59.0	1.0786
-45	80.0	1.0958
-30	85.0	1.1001
-13	100.0	1.1130

Maintenance requirements

The cooling models have high water quality requirements, so regular monitoring of water quality is required. It is recommended to test the pH and conductivity of the circulating water once a month to ensure that the water quality meets the above requirements. Failure to comply may result in severe corrosion and water leakage on the water cooled heatsink.

19011960A02

Copyright © Shenzhen Inovance Technology Co., Ltd.

Shenzhen Inovance Technology Co., Ltd.

www.inovance.com

Add.: Inovance Headquarters Tower, High-tech Industrial Park,
Guanlan Street, Longhua New District,
Shenzhen 518000, P.R. China

Tel: (0755) 2979 9595 Fax: (0755) 2961 9897

Suzhou Inovance Technology Co., Ltd.

www.inovance.com

Add.: No. 52, Tian E Dang Road, Wuzhong District, 215104,
Suzhou City, Jiangsu Province, P.R. China

Tel: (0512) 6637 6666 Fax: (0512) 6285 6720