INOVANCE

FORWARD, ALWAYS PROGRESSING

MD810 Series AC Drive (Multidrive System)

Installation Guide

Industrial Automation

Intelligent Elevator

New Energy Vehicle

Industrial Robot

Rail Transit

Data code 19011961A02

Preface

Introduction

The MD810 series is a new-generation low-voltage AC drive (multi-drive system). It is also a common DC bus drive system consisting of a power supply unit and multiple drive units, which can meet requirements of a single mechanical device with multiple drive points and continuous production line system. It is widely used in metal products, printing and packaging, textile printing and dyeing, chemical fiber and plastics, small-sized paper making, hoisting and other industries.

This guide introduces the installation and wiring of the AC drive, including pre-installation preparations, unpacking and transportation, mechanical installation, and electrical installation.

More Information

Document Name	Data Code	Description
MD810 Series AC Drive (Multidrive System) Installation Guide (this guide)	19011961	Describes the installation and wiring of the AC drive, including pre-installation preparations, unpacking and transportation, mechanical installation, and electrical installation.
MD810 Series AC Drive (Multidrive System) Hardware Guide	19011960	Describes the product information, mechanical design, electrical design, options, EMC FAQs, and certifications.
MD800 Series AC Drive (Multidrive System) Function Guide	19011963	Describes the commissioning tools, maintenance, quick commissioning steps, communication, parameters, fault codes, and product functions and applications.

Revision History

Date	Version	Description
October 2024	A02	• Updated *"1.1 Installation Environment" on page 13*. • Updated *"3.4 Pre-wiring Check" on page 42*. • Updated *"4.1 Electrical Wiring Diagram" on page 63*. • Made minor corrections.
January 2024	A01	• Updated *" Front Cover" on page 1*, *" Preface" on page 1*, *" Fundamental Safety Instructions" on page 6*, and *" Back Cover" on page 65*. • Added *"3.3 Installing the Power Supply Unit and Drive Unit (Water-Cooling Models)" on page 38* to add the description of installing the booksize power supply unit and drive unit.
May 2022	A00	Initial release.

Access to the Guide

This guide is not in the scope of delivery. If necessary, you can download the PDF file in three ways:

- Do keyword search under Service and Support at *http://www.inovance.com*.
- Scan the QR code with a smartphone to obtain the document.
- Scan the QR code below to install the app, where you can search for and download manuals.

Warranty Disclaimer

If your product becomes defective under normal use conditions, we will offer guaranteed repair services within the warranty period. Maintenance will be charged after the warranty expires.

Within the warranty period, maintenance fee will be charged for the following damage:

- Damage caused by operations not following the instructions in the user guide
- Damage caused by fire, flood, or unusual voltage
- Damage caused by unintended use of the product
- Damage caused by use beyond the specified scope of application of the product

- Damage or secondary damage caused by force majeure (natural disaster, earthquake, and lightning strike)

The maintenance is charged according to the latest Price List of Inovance. If otherwise agreed upon, the terms and conditions in the agreement shall prevail.

For details, see Product Warranty Card.

Table of Contents

Preface 1
Fundamental Safety Instructions 6
Installation Flowchart 12
1 Preparation Before Installation. 13
1.1 Installation Environment 13
1.2 Installation Clearance. 14
1.3 Installation Tools 17
1.3.1 Tools for Mechanical Installation 17
1.3.2 Accessory Kit 19
1.4 List of Cables. 20
2 Unpacking and Transportation 21
2.1 Inspection upon Unpacking 21
2.2 Storage Requirements 22
2.3 Transportation Requirements 22
2.4 Transportation Precautions 23
3 Installation Instructions 25
3.1 Removing the Cover 25
3.2 Installing the Power Supply Unit and Drive Unit (Air-Cooling Models) 26
3.2.1 Installing the Booksize Power Supply Unit and Drive Unit. 26
3.2.2 Installing the Vertical Tower Power Supply Unit 35
3.2.3 Installing the Vertical Tower Drive Unit 36
3.3 Installing the Power Supply Unit and Drive Unit (Water-Cooling Models) 38
3.4 Pre-wiring Check 42
3.5 Bus Connection 42
3.5.1 Connecting the Booksize Unit Bus 42
3.5.2 Connecting the Vertical Tower Unit. 48
3.6 Installing the DC Soft Charge Unit (Optional) 49
3.7 Wiring 50
3.7.1 Wiring Booksize Units 50
3.7.2 Wiring the Vertical Tower Power Supply Unit 54
3.7.3 Wiring the Vertical Tower Power Drive Unit. 56
3.8 System Grounding Requirements 59
3.9 Post-Wiring Check 60
3.10 Installing the Cover 62
4 Appendix 63

4.1 Electrical Wiring Diagram. 63

Fundamental Safety Instructions

Safety Disclaimer

- This chapter presents essential safety instructions for a proper use of the equipment. Before using this product, read the user guide thoroughly and correctly understand the related safety precautions. Failure to observe the safety precautions may result in serious injuries or death of personnel or device damage.
- "Danger", "Warning", and "Caution" items in this guide do not indicate all safety precautions that need to be followed; instead, they just supplement the safety precautions.
- Use this equipment according to the designated environment requirements. Damage caused by improper use is not covered by warranty.
- Inovance shall take no responsibility for any personal injuries or property damage caused by improper use.

Safety Levels and Definitions

DANGER Indicates that failure to comply with the notice will result in severe personal injuries or even death.

WARNING Indicates that failure to comply with the notice may result in severe personal injuries or even death.

CAUTION Indicates that failure to comply with the notice may result in minor or moderate personal injuries or equipment damage.

Safety Precautions

- Product illustrations in the user guide are sometimes shown without covers or protective guards. Remember to install the covers or protective guards as specified first, and then perform operations in accordance with the instructions.
- Product illustrations in this guide are for reference only. Actual products may vary.
- Personnel must take mechanical precautions to protect personal safety. Wear necessary protective safety gear, such as anti-smashing shoes, clothing, glasses, gloves, and sleeves.

Unpacking
WARNING • Do not install the equipment if you find damage, rust, or signs of use on the equipment or accessories upon unpacking. • Do not install the equipment if you find water seepage or missing or damaged components upon unpacking. • Do not install the equipment if you find the packing list does not conform to the equipment you received.

CAUTION

- Check whether the packing is intact and whether there is damage, water seepage, dampness, and deformation before unpacking.
- Unpack the package in accordance with the package sequence. Do not hit the package with force.
- Check whether there is damage, rust, or injuries on the surface of the equipment or equipment accessories.
- Check the materials and ensure all items are included.

Storage and transportation

WARNING

- Large-scale or heavy equipment must be transported by qualified professionals using specialized hoisting equipment. Failure to comply may result in personal injury or equipment damage.
- Before hoisting the equipment, ensure the equipment components such as the front cover and terminal blocks are secured properly and firmly with screws. Loosely-connected components may fall off and result in personal injuries or equipment damage.
- Never stand or stay below the equipment when the equipment is being hoisted by the hoisting equipment.
- When hoisting the equipment with a steel rope, ensure the equipment is hoisted at a constant speed without suffering from vibration or shock. Do not turn the equipment over or let the equipment stay hanging in the air. Failure to comply may result in personal injuries or equipment damage.

CAUTION

- Handle the equipment with care during transportation and mind your steps to prevent personal injuries or equipment damage.
- When carrying the equipment with bare hands, hold the equipment casing firmly with care to prevent parts from falling. Failure to comply may result in personal injuries.
- Store and transport the equipment based on the storage and transportation requirements. Failure to comply can result in equipment damage.
- Store and transport the product in environments free from water splashes, rain exposure, direct sunlight, strong electric and magnetic fields, and excessive vibration.
- Store the product for no more than 3 months. For longer storage periods, implement stricter protective measures and conduct necessary inspections.
- Before transportation, ensure the product is packed securely. For long-distance shipping, use airtight packaging.
- Always transport the product separately from any items or substances that could potentially damage or negatively affect its performance.

Installation

DANGER

- The equipment must be operated only by professionals with electrical knowledge. Operations by others are prohibited.

WARNING

- Read through the guide and safety instructions before installation.
- Do not install the product in places with strong electric or magnetic fields.
- Before installation, ensure that the installation position has sufficient mechanical strength to support the weight of the device. Failure to comply will result in a mechanical danger.
- Do not wear loose clothes or accessories during installation. Failure to comply may result in an electric shock.
- When installing the equipment in a closed environment (such as a cabinet or casing), use a cooling device (such as a fan or air conditioner) to cool the environment down to the required temperature. Failure to comply may result in equipment over-temperature or a fire.
- Do not retrofit the equipment.
- Do not fiddle with the bolts used to fix equipment components or the bolts marked in red.
- When the equipment is installed in a cabinet or final assembly, a fireproof enclosure providing both electrical and mechanical protections must be provided. The IP rating must meet IEC standards and local laws and regulations.
- Before installing devices with strong electromagnetic interference, such as a transformer, install a shielding device for the equipment to prevent malfunction.
- Install the product on an incombustible object such as metal and do not touch or attach the product to combustible objects. Failure to comply can result in fire accident.

CAUTION

- Cover the top of the equipment with a piece of cloth or paper during installation. This is to prevent unwanted objects such as metal chippings, oil, and water from falling into the equipment and causing faults. After the installation is completed, remove the protective guard. Failure to comply will block the vent and affect heat dissipation, causing overheat of the product.
- Resonance may occur when the equipment operating at a constant speed executes variable speed operations. In this case, install the vibration-proof rubber under the motor frame or use the vibration suppression function to reduce resonance.

Wiring

DANGER

- Equipment installation, wiring, maintenance, inspection, or parts replacement must be performed only by professionals.
- Before wiring, disconnect all the power supplies of the equipment, Wait for at least the time designated on the equipment warning label before further operations because residual voltage still exists after power-off. Measure the direct voltage of the main circuit and ensure that the voltage is within the safety range. Failure to comply will result in an electric shock.
- Do not perform wiring, remove the equipment cover, or touch the circuit board with power ON. Failure to comply will result in an electric shock.
- Make sure that the equipment is reliably grounded. Failure to comply will result in an electric shock.

WARNING

- Do not connect the input power supply to the output end of the equipment. Failure to comply will result in equipment damage or even a fire.
- When connecting a drive to the motor, check that the phase sequences of the drive and motor terminals are consistent to prevent reverse motor rotation.
- Cables used for wiring must meet cross sectional area and shielding requirements. The shield of the cable must be reliably grounded at one end.
- Fix the terminal screws with the tightening torque specified in the user guide. Improper tightening torque may overheat or damage the connecting part, resulting in a fire.
- After wiring is done, check that all cables are connected properly and no screws, washers or exposed cables are left inside the equipment. Failure to comply may result in electric shock or equipment damage.

CAUTION

- During wiring, follow the proper electrostatic discharge (ESD) procedures, and wear an antistatic wrist strap. Failure to comply will result in damage to internal equipment circuits.
- Use shielded twisted pairs for the control circuit. Connect the shield to the grounding terminal of the equipment for grounding purpose. Failure to comply can result in equipment malfunction.

Power-on

DANGER

- Before power-on, check that the equipment is installed properly with reliable wiring and the motor can be restarted.
- Check that the power supply meets equipment requirements before power-on to prevent equipment damage or fire accident.
- Do not open the cabinet door or protective cover of the product, touch any wiring terminal of the product, or remove any part of the product with power on. Failure to comply can result in an electric shock.

WARNING

- Perform a trial run after wiring and parameter setting to ensure the equipment operates safely. Failure to comply may result in personal injuries or equipment damage.
- Before power-on, check that the rated voltage of the equipment is consistent with that of the power supply. Failure to comply may result in a fire.
- Before power-on, check that no one is near the equipment, motor, or other mechanical parts. Failure to comply may result in personal injuries or even death.

Operation

DANGER

- The equipment must be operated only by professionals. Failure to comply can result in death or personal injury.
- Do not touch any connecting terminals or disassemble any unit or component of the equipment during operation. Failure to comply can result in an electric shock.

WARNING

- Do not touch the equipment casing, fan, or resistor with bare hands to feel the temperature. Failure to comply may result in personal injuries.
- Prevent metal or other objects from falling into the equipment during operation. Failure to comply may result in a fire or equipment damage.

Maintenance

DANGER

- Equipment installation, wiring, maintenance, inspection, or parts replacement must be performed only by professionals.
- Do not maintain the equipment with power on. Failure to comply can result in an electric shock.
- Before maintenance, cut off all equipment power supplies and wait as specified on the product warning sign.
- In case of a synchronous motor, do not touch the motor terminals even after power-off because there is still induced voltage generated during rotation. Failure to comply will result in an electric shock.

WARNING

- Perform routine and periodic inspection and maintenance on the equipment in accordance with maintenance requirements and keep a maintenance record.

Repair

DANGER

- Equipment installation, wiring, maintenance, inspection, or parts replacement must be performed only by professionals.
- Do not maintain the equipment with power on. Failure to comply can result in electric shock.
- Before inspection and repair, cut off all equipment power supplies and wait as specified on the product warning sign.

WARNING

- Require for repair services in accordance with the product warranty agreement.
- When the fuse is blown or the circuit breaker or residual current device (RCD) trips, wait for at least the time designated on the equipment warning label before power-on or further operations. Failure to comply may result in death, personal injury or equipment damage.
- When the equipment is faulty or damaged, the troubleshooting and repair work must be performed by professionals that follow the repair instructions, with repair records kept properly.
- Replace quick-wear parts of the equipment in according with the replacement instructions.
- Do not operate damaged equipment. Failure to comply may result in worse damage.
- After the equipment is replaced, perform wiring inspection and parameter settings again.

Disposal
WARNING • Dispose of retired equipment in accordance with local regulations and standards. Failure to comply may result in property damage, personal injuries, or even death. • Recycle retired equipment by observing industry waste disposal standards to avoid environmental pollution.

Safety Labels

To ensure safe operations, comply with safety signs on the device, and do not damage or remove the safety labels. The following table describes the safety signs.

Safety Sign	Description
	• Before using the product, read the user guide and safety precautions carefully. Failure to comply will result in personnel injuries or death or product damage. • Do not touch the terminals or remove the cover with power ON or within 10 min after power-off. Failure to comply will result in an electric shock.

Installation Flowchart

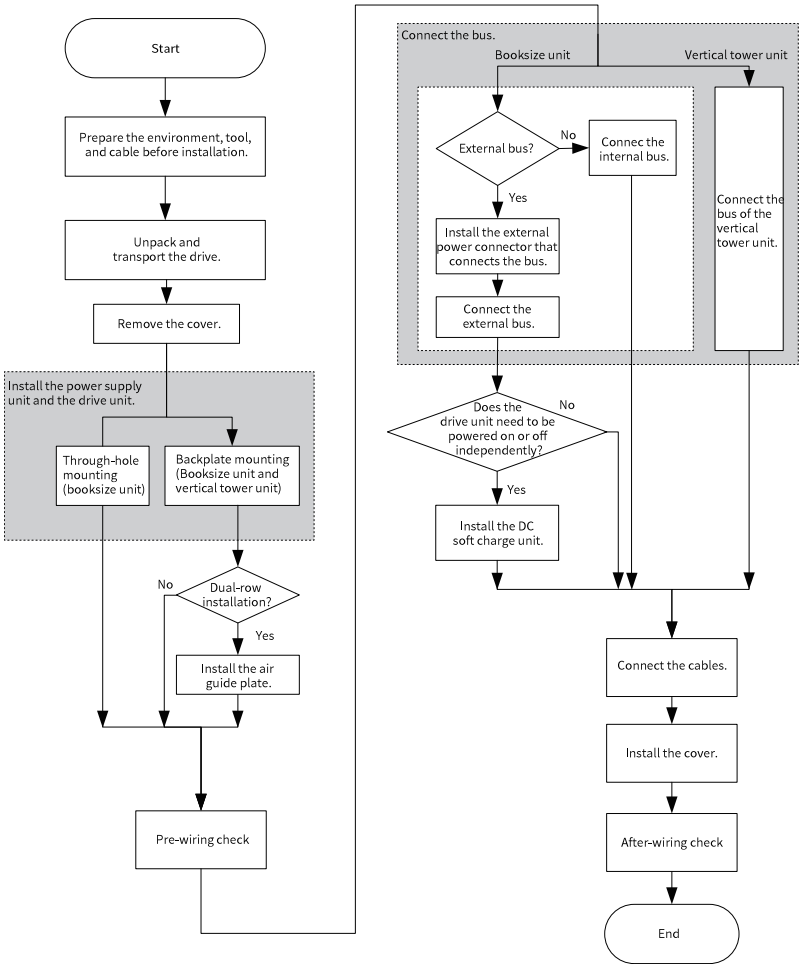

1 Preparation Before Installation

1.1 Installation Environment

To maximum the product performance and ensure long-term use, install the AC drive in an environment meeting the following requirements.

Table 1–1 Installation Environment

Item	Requirement
Installation location	Indoors
Grid overvoltage	OVC III
Temperature	Installation/Ambient temperature: • Applications without overload: 1) -10°C to +40°C: derating not required; 2) 40°C < temperature ≤ 50°C: derated by 1.5% for every additional 1°C; 3) > 50°C: not recommended for use • Applications with overload: 1) -10°C to +40°C: derating not required; 2) 40°C < temperature ≤ 50°C: derated by 1.5% for every additional 1°C; 3) > 50°C: not recommended for use Storage/Transportation temperature: -25°C to +70°C (no freezing) • To improve the reliability of the machine, use the AC drive in environments without dramatic temperature change. • When installing the AC drive in an enclosed cabinet, use a cooling fan or air conditioner to keep the incoming air temperature below 50°C. Failure to comply will result in overheat or fire. • Install the AC drive on a flame-retardant surface, with sufficient clearance reserved for heat dissipation. • Take measures to prevent the AC drive from being frozen.
Relative humidity	Humidity change range: 5%–95%
	Relative humidity for storage: 5% to 95%.
	Relative humidity for transportation: lower than 95% at +40 °C

Item	Requirement
Environment	Pollution degree (PD): PD2 or below Install the AC drive in a location that meets the following descriptions. • Free from direct sunlight, dust, corrosive gas, combustible or explosive gas, oil mist, water vapor, drip, or salt • Install the AC drive in a place away from vibration. Keep the AC drive away from devices such as a punch press. • Do not install any device generating electromagnetic waves or interference, such as transformers, around the AC drive. If such a device is required, install a shielding plate between the device and the AC drive. Otherwise, the AC drive will malfunction. • The product is intended for cabinet assembly for systems operating in the end-user environment. The end-user system shall provide enclosures for fireproof and electrical and mechanical protection in line with local laws and regulations and relevant IEC standards.
Maximum altitude	Star power grid: maximum 3000 m (9843 ft) • ⩽ 1000 m (3281 ft.): derating not required • > 1000 m (3281 ft): derated by 1% for every additional 100 m (328.1 ft)
Vibration	• Application scenario: Tested according to IEC 60068-2-6 Amplitude at 5 Hz to 8.4 Hz: 3.5 mm; acceleration at 8.4 Hz to 200 Hz: 1 g; 10 cycles/axis • Transportation scenario: Tested according to IEC 60068-2-64 Power spectrum density at 5 Hz to 100 Hz: 0.01 g^2/Hz; power spectrum density at 200 Hz: 0.001 g^2/Hz; Grms: 1.14 g
Dust	Compliant with class 3S2 in IEC60721-3 (non-conductive dust)
Chemically active substance	Compliant with class 3C2 in IEC60721-3
Shock	Usage/transportation scenario: Tested according to IEC 60068-2-27 Acceleration: 15 g; pulse width; 11 ms; 18 times in directions of three axes
Pollution degree	PD2
IP rating	IP00
Protection class	Class I

1.2 Installation Clearance

The power supply unit and drive unit of the MD810 series are classified into booksize and vertical tower structures. The booksize unit features the width of 50 mm, 100 mm, 200 mm, and 300 mm, and the vertical tower unit features the width of 180 mm and 230 mm (drive unit only). The recommended installation methods include single-rack installation and dual-rack installation. For dual-rack installation, the following table describes the minimum clearance between two racks. Install the air guide plate for the units on the lower rack.

Table 1–2 Minimum clearance during the installation of the unit

Items	Unit with Width of 50 mm	Unit with Width of 100 mm	Unit with Width of 200 mm	Unit with Width of 300 mm	Unit with Width of 180 mm	Unit with Width of 230 mm (Drive Unit Only)
	Booksize Unit				Vertical unit	
S1	⩾ 300 mm	⩾ 300 mm	⩾ 300 mm	⩾ 300 mm	⩾ 300 mm	⩾ 300 mm
S2	⩾ 300 mm	⩾ 300 mm	⩾ 300 mm	⩾ 300 mm	⩾ 500 mm	⩾ 500 mm
S3	⩾ 300 mm	⩾ 300 mm	⩾ 300 mm	⩾ 300 mm	/	/

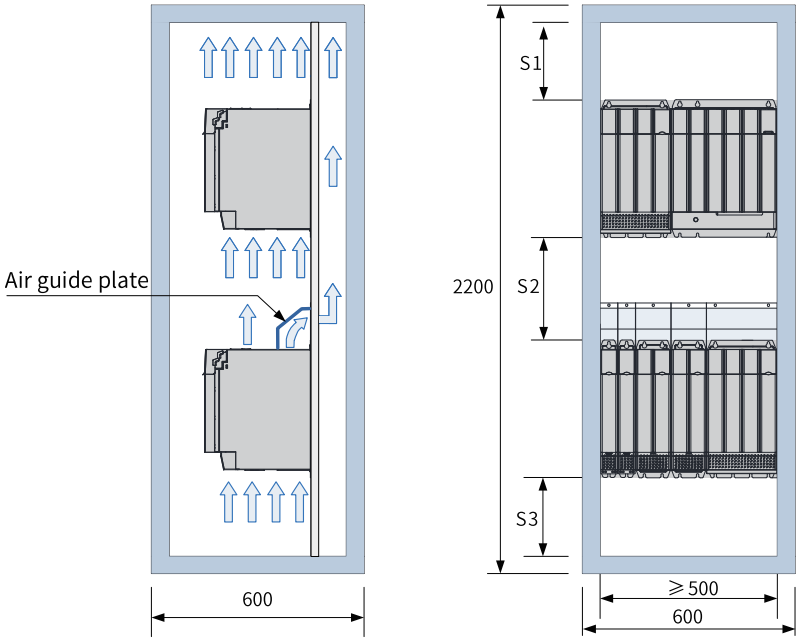

Figure 1-1 Clearance for booksize units in dual-rack installation (in mm)

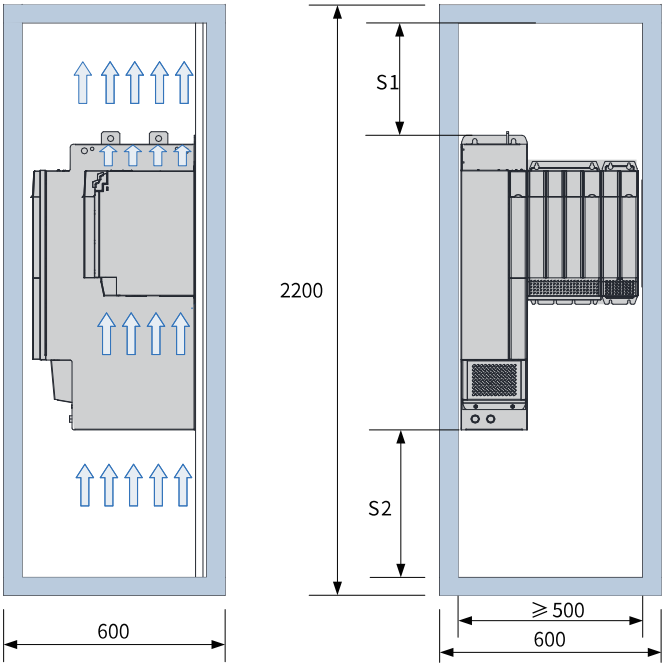

Figure 1-2 Clearances for installing the vertical tower unit (in mm)

Note

It is recommend that the power supply unit and drive unit be installed vertically.

1.3 Installation Tools

1.3.1 Tools for Mechanical Installation

Table 1–3 Mechanical installation tools

No.	Tool	Specification	Usage Scenario	Appearance
1	Straight screwdriver	2.5 mm	Snap-fit joint of the plastic cover; cable screws on the terminal block	
2	Phillips screwdriver	Recommended model: PH2 (rod diameter: 6 mm) Rod length: ⩾ 190 mm	Used in various scenarios	
3	Torque wrench	Torque range #1: 1.0 N·m to 5.0 N·m	Used to install the module, and tighten or loosen the input/output terminal and the grounding screw.	
		Torque range #2: 10 N·m to 35 N·m	Used to tighten or loosen the input/output terminal and the grounding screw.	
		Recommended torque #3: 85 N·m	Used to tighten or loosen the screw of the input/output copper bar.	
4	Socket wrench	Socket wrench crosshead model: PH2	Used to tighten or loosen the M5, M6, and M8 outer hexagon screw.	
		Outer hexagon socket wrench specification: 16 mm	Used to tighten or loosen the M10 outer hexagonal screw/nut.	
		Outer hexagon socket wrench specification: 18 mm	Used to tighten or loosen the M12 outer hexagon screw/nut.	
		Outer hexagon socket wrench specification: 24 mm	Used to tighten or loosen the M12 outer hexagon screw/nut.	

No.	Tool	Specification	Usage Scenario	Appearance
5	Socket wrench extension rod	100 mm	Used to tighten or loosen the module installation screw.	
6	Needle-nose pliers	/	Used to remove the threaded hole or closure plate of the plastic item.	
7	Gloves	/	Used to prevent static electricity during mechanical installation.	
8	Nylon tie	100 mm	Cable	/
9	Outer hexagon combination screw with flat washer	M6 × 20	Used to install the power supply unit, drive unit, and DC soft charge unit. • Number of screws for the power supply unit with the width of 50 mm, the drive unit, and the DC soft charge unit: 2 per unit • Number of screws for the power supply unit with the width of 100 mm and 200 mm, the drive unit, and the DC soft charge unit: 4 per unit • Number of screws for the power supply unit with the width of 300 mm and the drive unit: 8 per unit	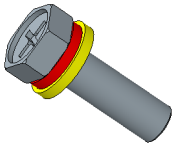

Unless otherwise specified, the tightening torque of the screws is as follows.

Table 1–4 Tightening torque of the screws

Screw/ Nut Specification	M3	M4	M5	M6	M8	M10	M12	M16
Tightening torque (N·m)	0.55	1.2	2.8	4.8 (The tightening torque of the R, S, and T terminals on the 22 kW power supply unit is 3 N·m.)	13	20	35	85

1.3.2 Accessory Kit

Table 1–5 Items in the accessory kit

Name	Appearance	Quantity
Network cable		1
Grounding aluminum bar	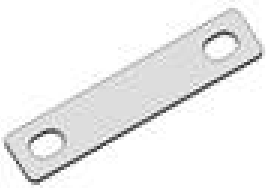	1
Overlapping copper bar (for models with the width of 50 mm)		2

Note

*The illustration is for reference only and may be different from the product you order.

1.4 List of Cables

Table 1–6 Cables

Type	Name	Appearance	Type	Name	Appearance
Main circuit cable	Power cable	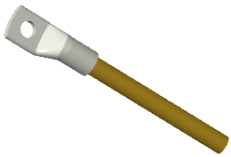	Control circuit cable	Signal cable	
	Grounding cable			Network cable	

Note

*The illustration is for reference only and may be different from the product you order.

2 Unpacking and Transportation

2.1 Inspection upon Unpacking

When receiving goods from the shipping company, check that you have received all the items specified on the delivery note. Notify the shipping company immediately of any missing components or damage. Seek support from Inovance office or your local agent if necessary.

After unpacking, check the item lists carefully and confirm that the terminals have been locked firmly to prevent them from falling off during transportation.

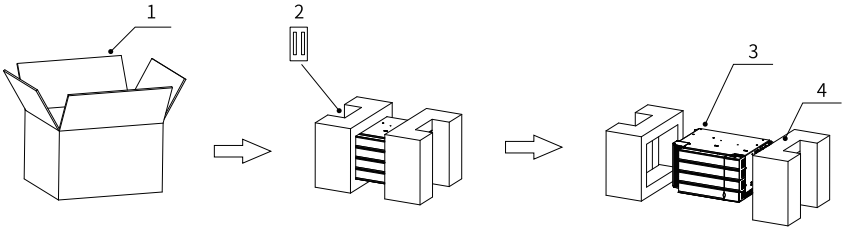

1. Carton; 2. Accessory kit; 3. Power supply unit; 4. Expanded polyethylene (EPE)

Figure 2-1 Item list of the power supply unit

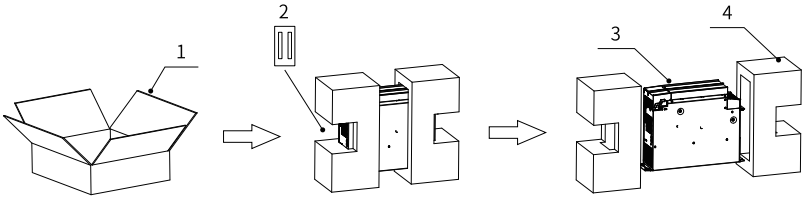

1. Carton; 2. Accessory kit; 3. Drive unit; 4. EPE

Figure 2-2 Item list of the drive unit

Caution

The electrical safety performance of the AC drive may be affected if it is damaged during transportation. Connect the equipment only after performing professional high-voltage test.

2.2 Storage Requirements

Requirements for storage with package:

- When the AC drive is placed near the wall and no passage is left, reserve the clearance of at least 200 mm between the AC drive and the wall.
- Never occupy the fire exit and block the emergency exit when storing the AC drive.
- Reserve a passage with the width of about 1 meter in front of the fire hydrant, and do not place the AC drive within one meter in front of the power distribution cabinet.
- When the AC drive packed in a carton is stored outdoors, place the carton on a pallet and fully cover it with rain-proof cloth.
- The AC drive that has been stored for more than 24 hours or underwent severe weather must pass the risk assessment by relevant departments before transshipment and delivery.
- Store the AC drive with care. Never throw it, drag it on the ground, or step on the package and operate it.
- During storage, place the large and heavy AC drive at the bottom. The total stack height cannot exceed 1.8 m.
- When the AC drive is delivered with a pallet, do not place it beyond the pallet. When there are more than two stacking layers and the overlapping mode is used, fix the AC drive with the stretch film. Do not use the box-sealing tape to fix the AC drive.

Requirements for storage without package:

- Store the AC drive in a clean and dry room, with the temperature range from -25°C and +70°C and the temperature change rate no larger than 20°C/hour.
- If the AC drive needs to be stored for a long period of time, cover it up or take similar measures to prevent the AC drive from being polluted or affected by the surrounding environment.
- Pack the AC drive with the original packing box provided by Inovance as possible as you can.
- Do not expose the AC drive to moisture, high temperature, or outdoor direct sunlight for a long time.
- If the AC drive is not switched on for more than one year, repair the electrolytic capacitor before powering on the AC drive. Otherwise, the electrolytic capacitor might be damaged.

2.3 Transportation Requirements

Due to the small size and light weight, you can manually transport the AC drive. Handle the AC drive with care. Do not throw or drag the AC drive or step on its package.

It is recommended to use carton box for transportation. When packing and transporting the AC drive, ensure that the stacking height is no higher than 1.8 m.

2.4 Transportation Precautions

Precautions for transportation loss

1. When receiving goods from the shipping company, check the MD810 series AC drive carefully.
2. Check that you have received all the items specified on the delivery note.
3. Notify the shipping company immediately of any missing or damaged components.
4. If you find any invisible loss or damage, notify the shipping company immediately and ask it to perform equipment qualification.
5. If you do not notify the shipping company immediately, you might lose the right to claim compensation for goods loss or damage.
6. If necessary, contact local Inovance technical office for support.

Precautions during transportation

1. Pack the equipment according to the requirements (such as climatic conditions) during the transportation and of the destination before the equipment leaves the factory.
2. Follow precautions for transportation, storage, and operation indicated on the package.
3. Place the equipment on a wooden chassis or pallet when transporting it with a forklift.
4. Do not disassemble the equipment when it is placed on the wooden chassis (pallet) for further transportation.
5. Allowable ambient temperature during transportation: -25°C to +70°C, class 2K3 according to IEC 60721-3-2, maximum 24 hours at -40°C
6. To avoid damage to the AC drive, observe the following precautions during auxiliary installation for cabinet-based transportation.
   - Install the booksize units closely in rows.
   - Install the crossbeam at the side for auxiliary fixing during the installation of the vertical tower unit, as shown in the following figure.

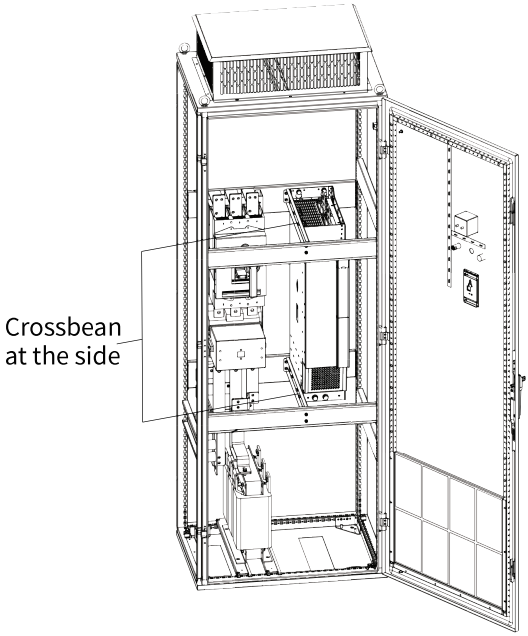

- Tap the screw on the installation backplate, and then use self-clinching nuts or independent nuts on the back of the backplate to enhance screw-thread fitting and fastening effect.
- Ensure that the installation backplate has excellent stiffness and the thickness of not less than 2 mm. Reinforce the backplate at the top and bottom installation location.

3 Installation Instructions

3.1 Removing the Cover

① Open the translucent operating panel cover upward and loosen the screws on the upper cover by using a screwdriver. 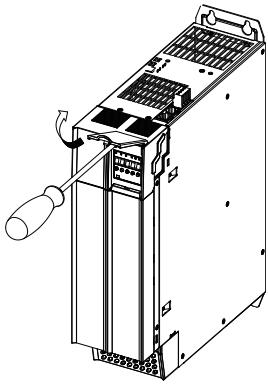	② Pull the upper part of the upper cover and then the lower part to remove it. 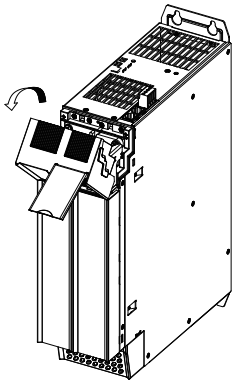
③ Pull out the operating panel box. 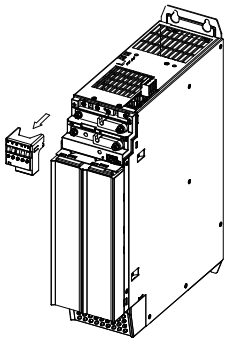	④ Hold the bottom of the lower cover with your hands, and pull the lower part of the cover and then the upper part to remove the lower cover. 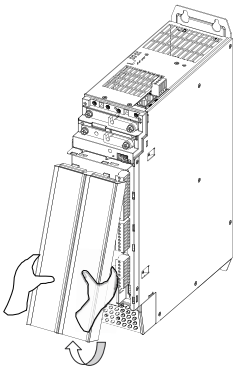

⑤ Insert the screwdriver into the clasp of the power terminal cover, and then pry the clasp. 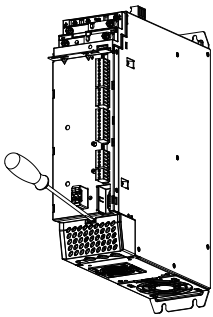	⑥ Pull the upper part of the power terminal cover and then the lower part to remove it. 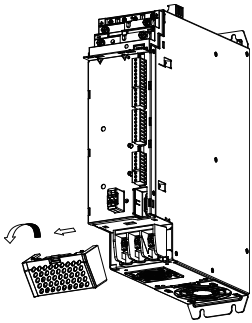

3.2 Installing the Power Supply Unit and Drive Unit (Air-Cooling Models)

3.2.1 Installing the Booksize Power Supply Unit and Drive Unit

Backplate mounting

1. Pre-lock the M6x20 cross-recessed hexagon head combination screws on the installation backplate with the clearance of about 5 mm between the screws and the backplate.

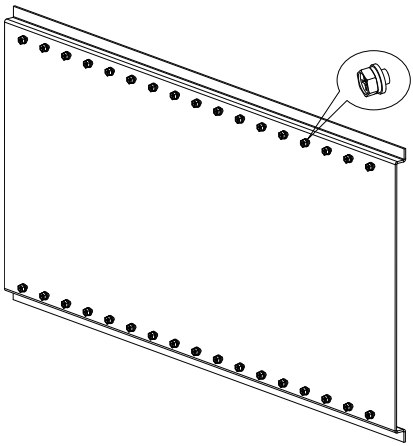

2. Mount the power supply unit to the pre-lock screws on the installation backplate, and then tighten the screw by using a torque wrench.

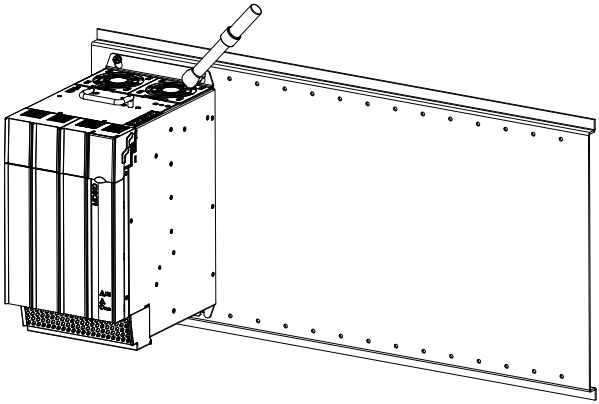

3. Hang the drive unit to the backplate, and then tighten the screw using a torque wrench.

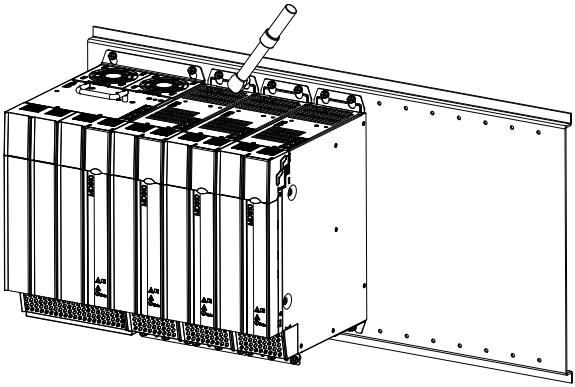

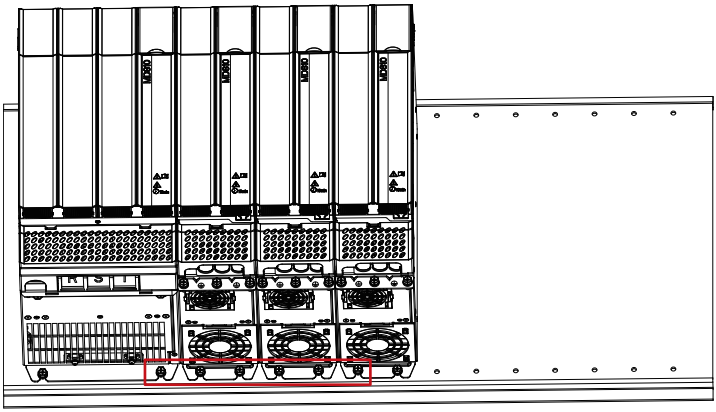

4. Install the grounding aluminum bar between adjacent units.

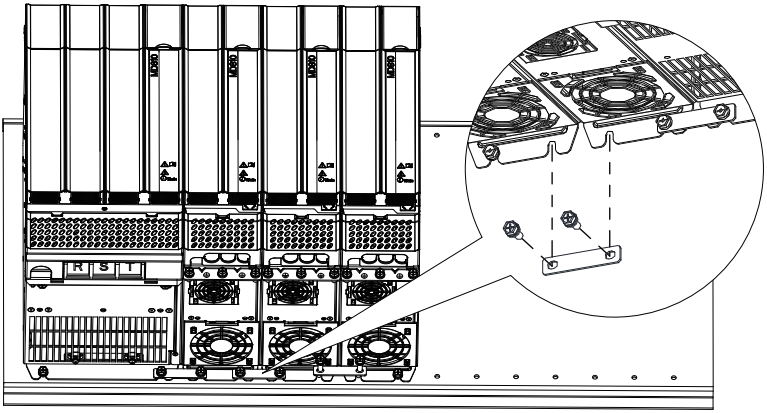

5. Install the shield bracket (optional). This step can be skipped for standard models as the shield bracket is not included in the standard configuration.

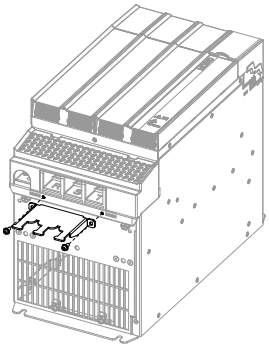

6. If units are installed in two rows, install an optional air guide plate for the units installed in the lower row.

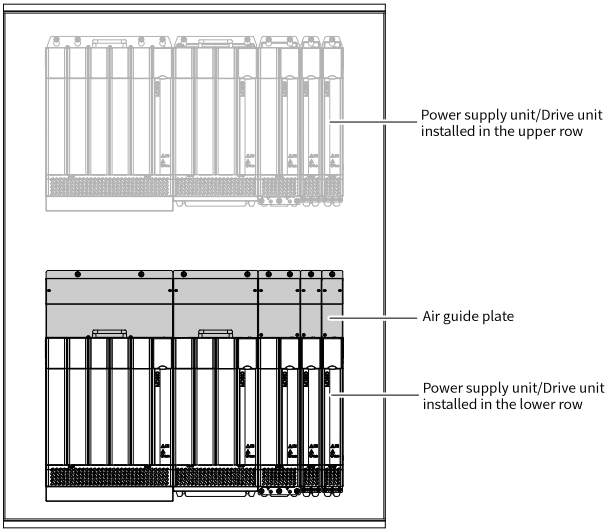

The following figure describes the installation of the air guide plate for the power supply unit and drive unit.

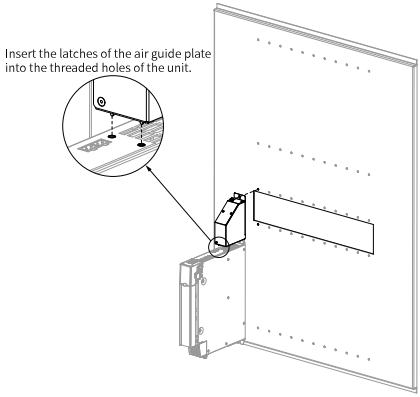

Figure 3-1 Installation of the air guide plate for the unit with the width of 50 mm

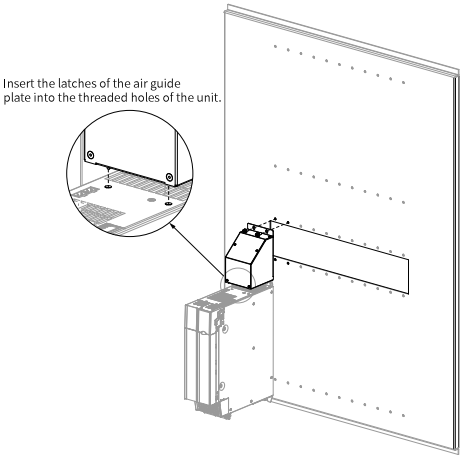

Figure 3-2 Installation of the air guide plate for the unit with the width of 100 mm

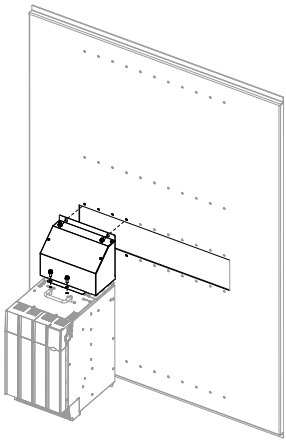

Figure 3-3 Installation of the air guide plate for the power supply unit with the width of 200 mm

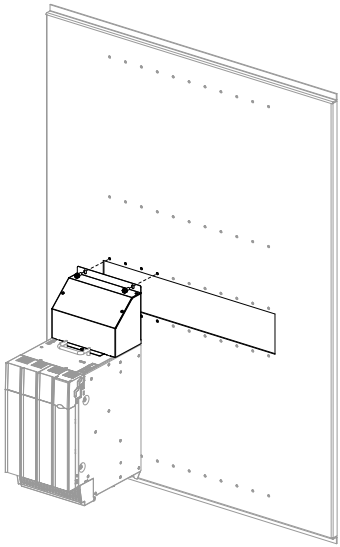

Figure 3-4 Installation of the air guide plate for drive unit with a width of 200 mm

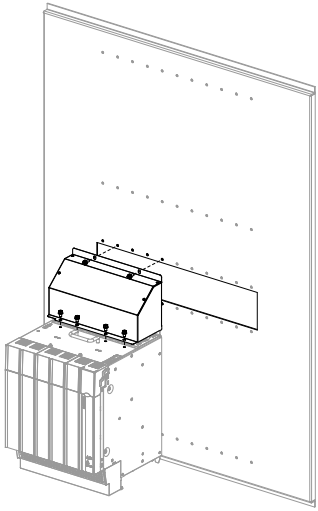

Figure 3-5 Installation of the air guide plate for the unit with the width of 300 mm

Through-hole mounting

1. Install the through-hole mounting bracket (optional).

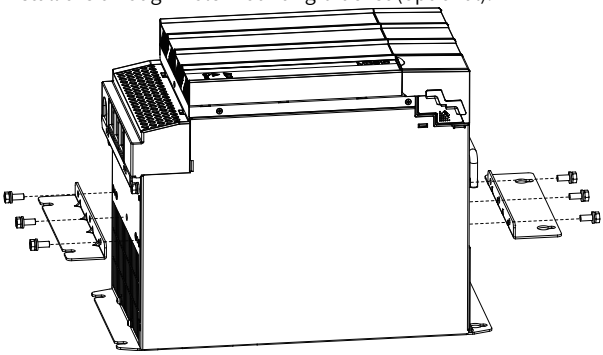

2. Pre-lock the M6x20 cross-recessed, external hexagon combination screws on the installation backplate with the clearance of about 5 mm between the screws and the backplate.

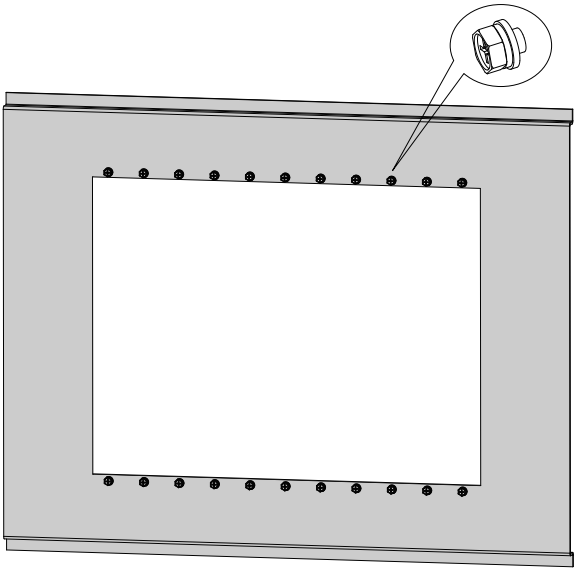

3. Mount the power supply unit to the pre-lock screws on the installation backplate, and then tighten the screw by using a torque wrench.

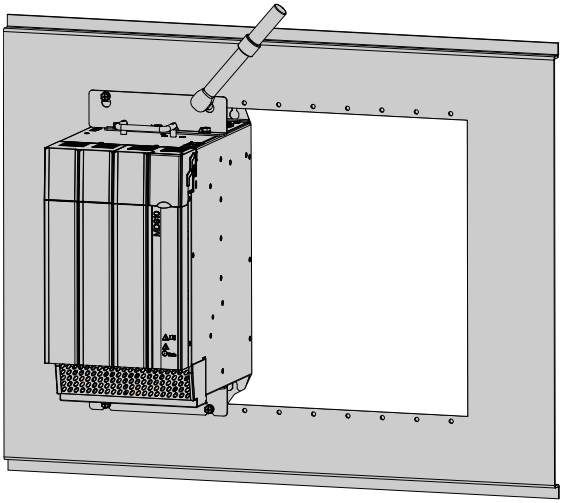

4. Hang the drive unit to the backplate, and then tighten the screw using a torque wrench.

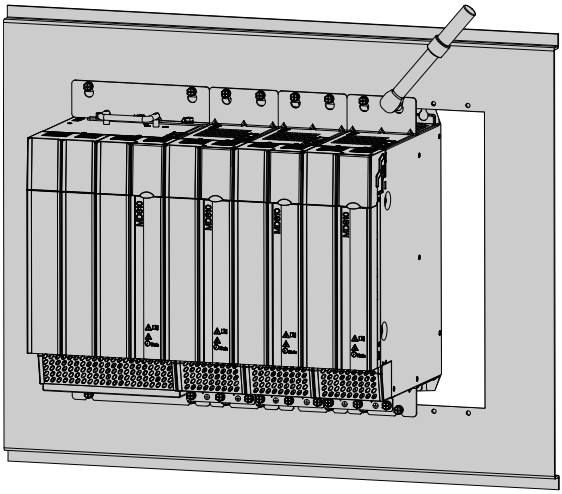

Note

The screws on the lower side of the adjacent units are not locked (as shown in the figure below) for installing the grounding aluminum bar.

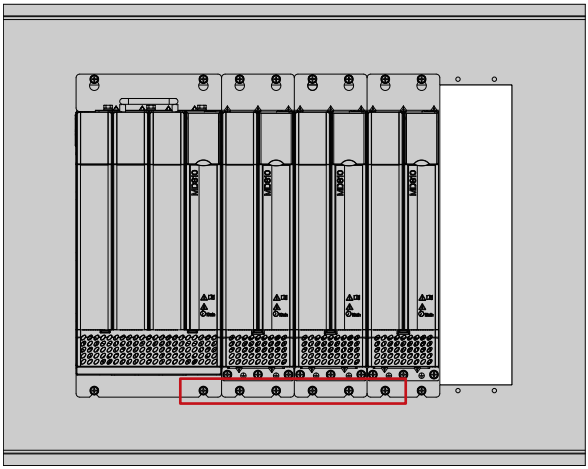

5. Install the grounding aluminum bar between adjacent units.

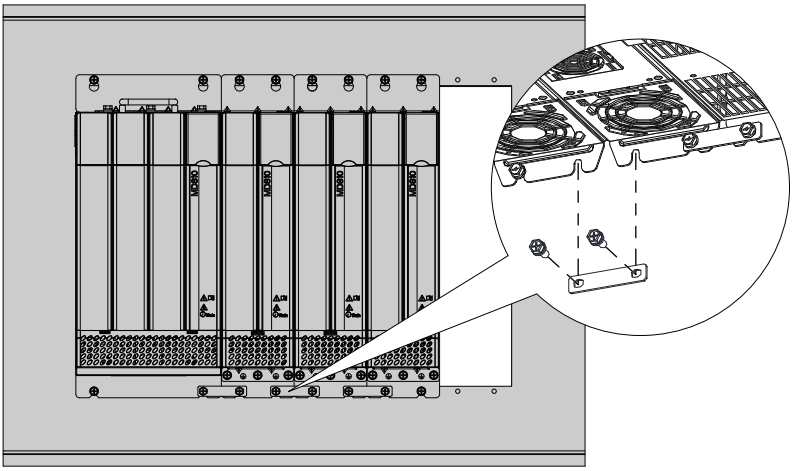

6. Install the shield bracket (optional). This step can be skipped for standard models as the shield bracket is not included in the standard configuration.

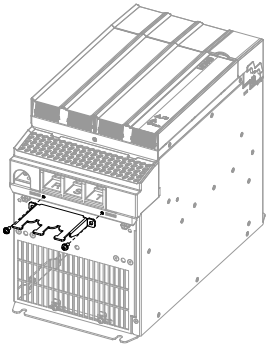

3.2.2 Installing the Vertical Tower Power Supply Unit

The 355 kW power supply unit (width of 180 mm) of the MD810 series is a vertical tower unit. Due to its large size and heavy weight, install the vertical tower unit in a cabinet separately.

The following figure shows the installation of the vertical tower power supply unit.

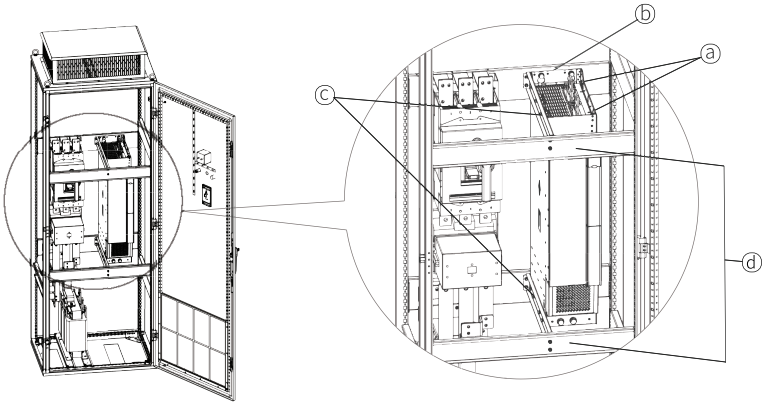

To install the power supply unit, do the following:

1. Lift the power supply unit through the lifting holes (a) at the top of the unit with the hoisting equipment (such as the crane), and then install the unit into the cabinet.
2. Fix the power supply unit to the rear beam of the cabinet or the rear installation panel (b) with the M10x25 outer hexagonal screw, spring washer, and flat washer.
3. Fix the left installation beam (c) and front beam (d) of the drive unit with the M6x16 cross-recessed outer hexagon combination screw.
4. Tighten the screws with the standard torque to complete the installation.

3.2.3 Installing the Vertical Tower Drive Unit

The 200 kW to 355 kW drive unit (with the width of 230 mm) of the MD810 series is a vertical tower unit. Due to its large size and heavy weight, install the vertical tower unit in a cabinet separately.

To install the drive unit, do the following:

1. Fix the installation bracket to the crossbeam at the bottom of the cabinet.

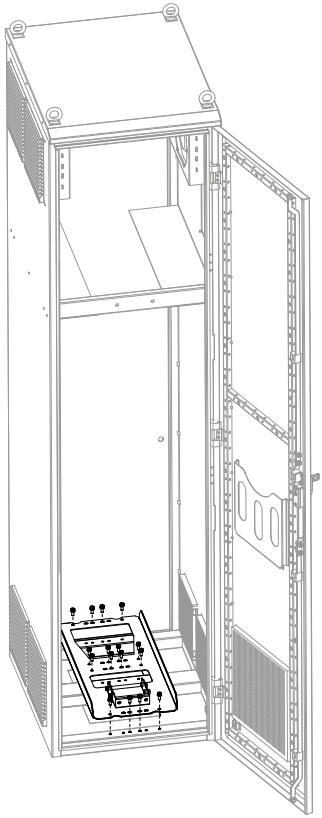

The installation bracket is used to install the drive unit into the cabinet. As a standard accessory for the AC drive, design the installation crossbeam according to the size of the installation bracket. The following figure describes the dimensions of the installation bracket (in mm).

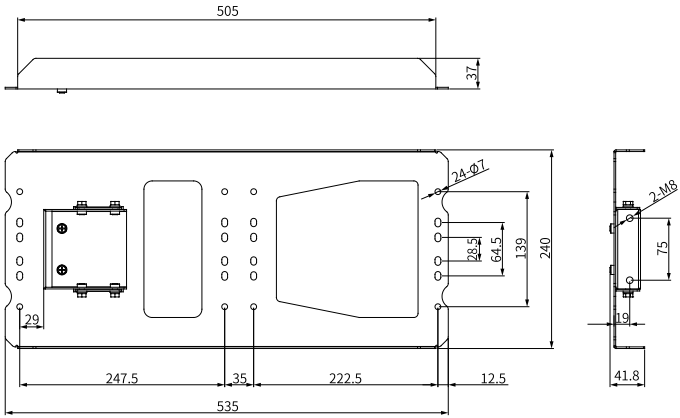

2. Install a slope.

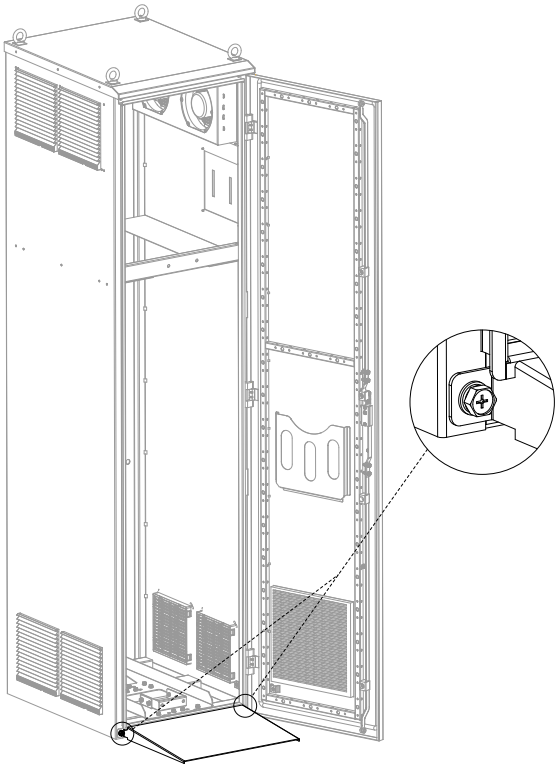

3. Push the drive unit into the cabinet along the slope, and fix it to the cabinet with the M8x20 combination screws.

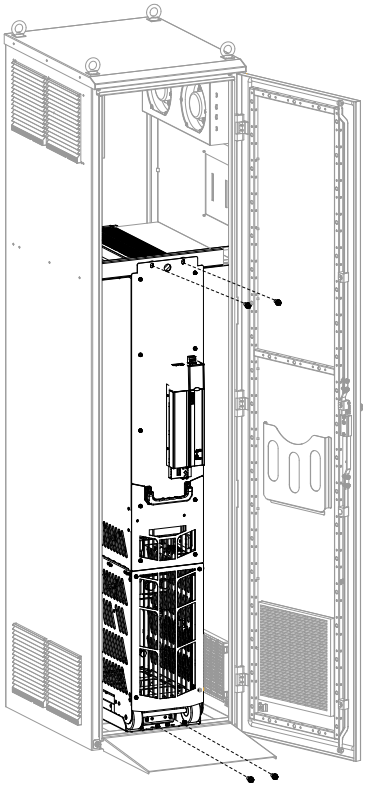

3.3 Installing the Power Supply Unit and Drive Unit (Water-Cooling Models)

The power supply unit and drive unit of the water-cooling models are booksize unit.

The water-cooling models support backplate mounting instead of through-hole mounting. The air guide plate is not required. To install the power supply unit, do the following:

1. Pre-lock the M6x20 cross-recessed hexagon head combination screws on the installation backplane with the clearance of about 5 mm between the screws and the backplane.

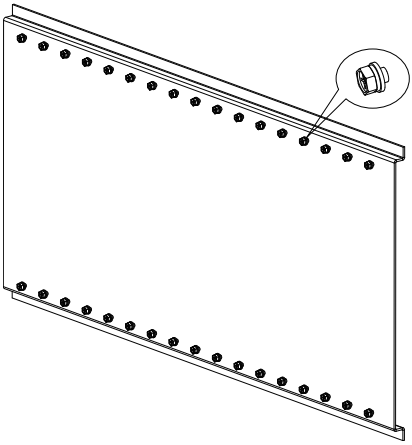

2. Mount the power supply unit to the pre-lock screws on the installation backplate, and then tighten the screw by using a torque wrench.

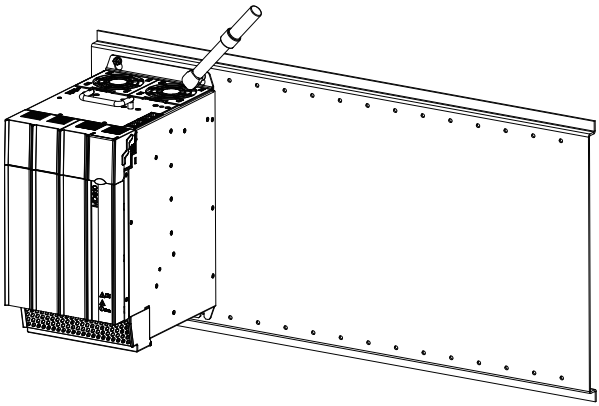

3. Hang the drive unit to the backplate, and then tighten the screw using a torque wrench.

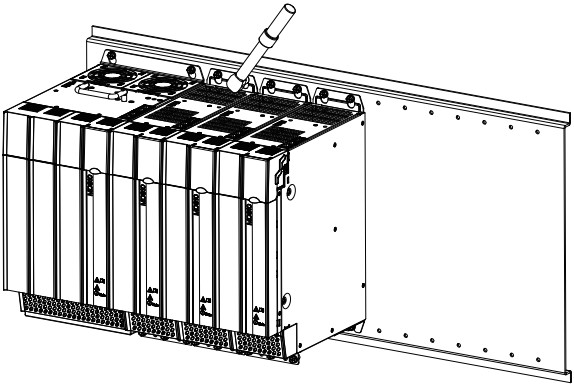

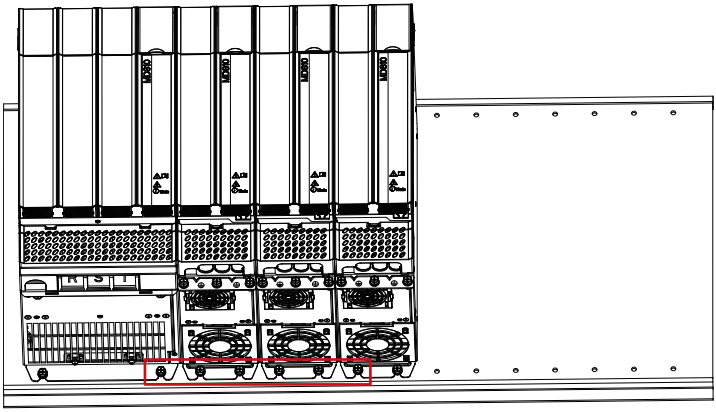

4. Install the grounding aluminum bar between adjacent units.

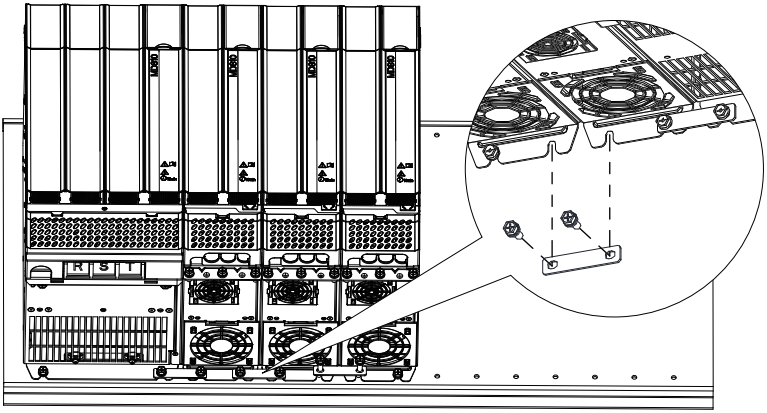

5. Connecting the coolant pipes.
   The pipe nipples on the AC drive with both internal and external threads (see figure below), support both types of connections. The external thread is a G¾ pipe thread, and the internal thread is a G½ pipe thread.

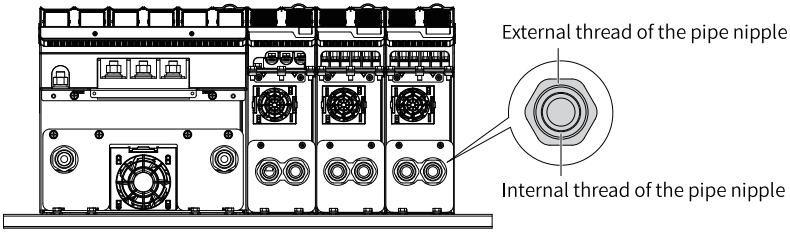

   a. Remove the plug of the pipe nipple.

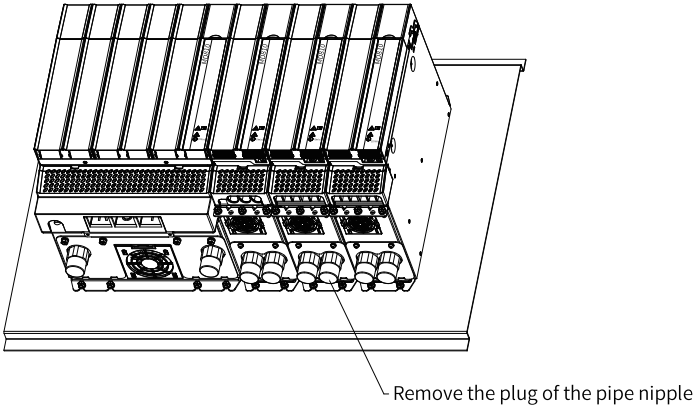

b. Connect the coolant pipes.

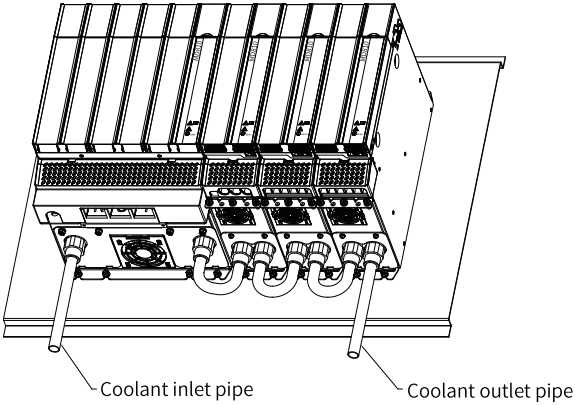

6. Install the shield bracket (optional). This step can be skipped for standard models as the shield bracket is not included in the standard configuration.

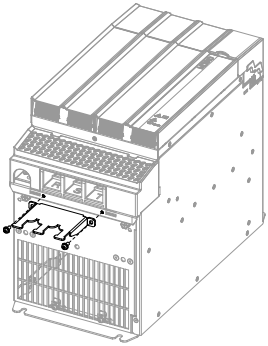

3.4 Pre-wiring Check

- Never wire the drive with power on, and keep all circuit breakers in the OFF state. Failure to comply can result in electric shock.
- Before further operations, ①cut off input and output power and ensure the power indicator is off. ②wait for at least the time designated on the product warning label to ensure the bus voltage is lower than 36 V.
- Install and connect the motor, cabinet units, and other components in accordance with the recognized technical rules in the country and other applicable regional regulations. Comply with regulations related to the cable dimensions, fuses, grounding, disconnection, isolation, and overcurrent protection.
- If the safety device trips in a branch circuit, a faulty current may have been disconnected. To reduce the risk of fire or electric shock, perform inspection on the conductive parts and other components in the unit and replace damaged parts. If any fuse trips, figure out the cause and rectify the fault.

3.5 Bus Connection

3.5.1 Connecting the Booksize Unit Bus

Connection Method

The booksize unit can be connected through external buses or internal buses. The following table describes the two connection methods.

Connection Method	Scenario	Remark
Internal bus	The bus is used to connect adjacent units, and no DC soft charge unit is installed for the drive unit.	/
External bus	• The bus is used to connect adjacent units, and a DC soft charge unit is installed for each drive unit. • The bus is used to connect non-adjacent units.	The co-bus external power terminal must be installed.

Internal bus

To connect units through the internal bus, do the following:

1. Loosen the screws of all busbars and the positive and negative bus terminals of all adjacent units.
2. Rotate the busbar to the positive and negative bus terminals of the adjacent unit.
3. Tighten the screws on the ends of the busbar.

When a row of units are installed, the left bus protective baffle of the leftmost unit and the right bus protective baffle of the rightmost unit must be reserved to prevent electric shock.

Before connecting the internal busbar, remove the left and right bus protective baffles of the top cover with tools such as needle-nose pliers or diagonal pliers.

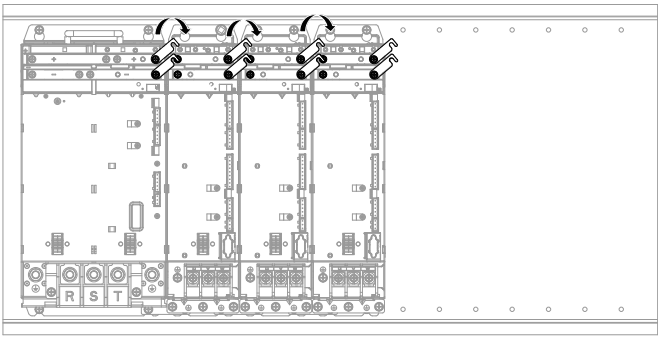

External bus

To connect units through the external bus, do the following:

1. Install the co-bus external power terminal.

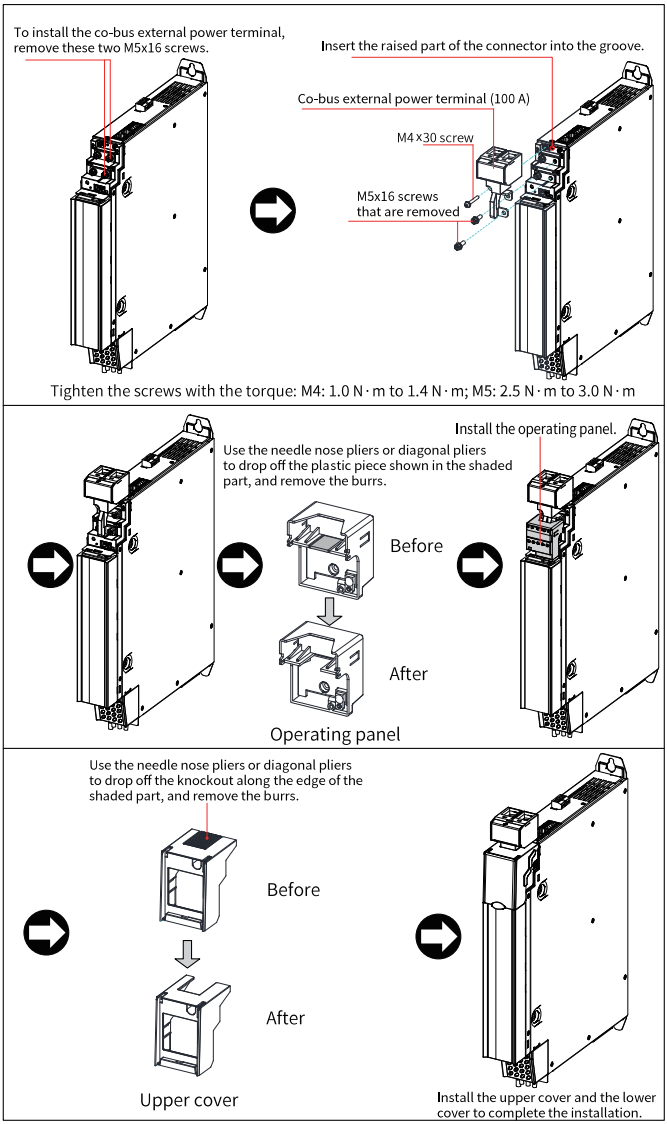

Figure 3-6 Installation of 100 A co-bus external power terminal (for the unit with the width of 50 mm)

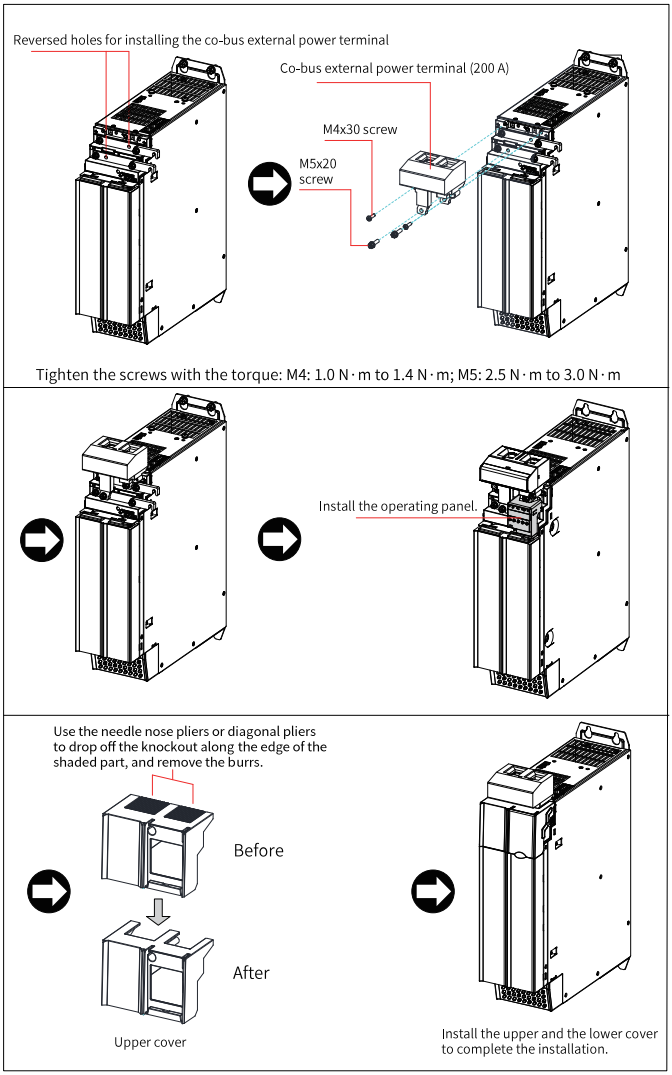

Figure 3-7 Installation of 200 A co-bus external power terminal (for the unit with the width of 100 mm)

The installation procedure of the unit with the width of 200 mm is the same as that of the unit with the width of 100 mm. The following figure shows the position after the installation is completed.

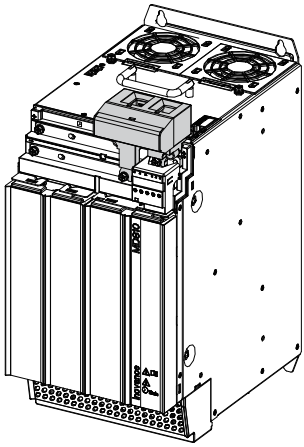

Figure 3-8 Installation of 200 A co-bus external power terminal (for the unit with the width of 200 mm)

The installation procedure of the unit with the width of 300 mm is the same as that of the unit with the width of 100 mm. The following figure shows the position after the installation is completed.

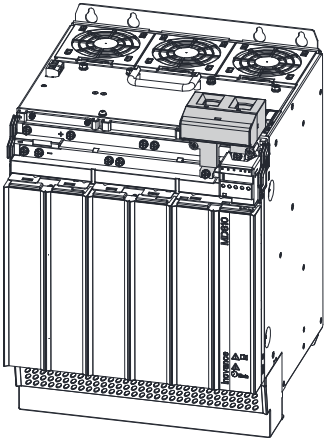

Figure 3-9 Installation of 200 A co-bus external power terminal (for the unit with the width of 300 mm)

2. Connect the buses of two units through the co-bus external power terminal.

When the co-bus external power terminal is installed for the drive unit and it is connected to the power supply unit through the terminal, do not connect the busbar of the drive unit to the positive and negative busbar terminals of the adjacent unit.

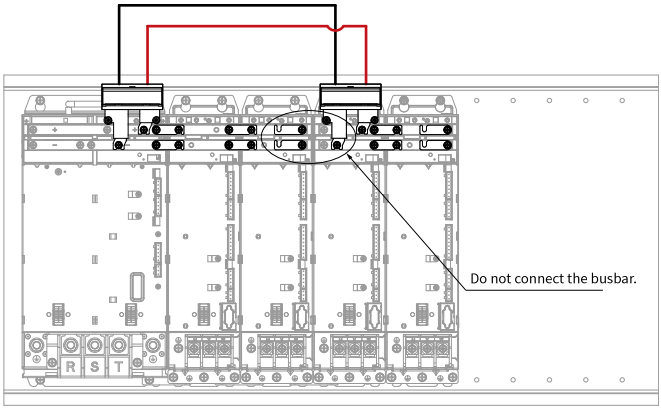

To connect the co-bus external power terminal, do the following:

a. Insert a Phillips screwdriver into the slot, push the buckle inward, and then open the cover of the co-bus external power terminal.

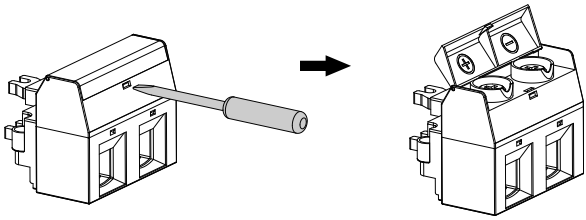

b. Loosen the screws, insert the cables without the insulation into the co-bus external power terminal, and then tighten the screws.

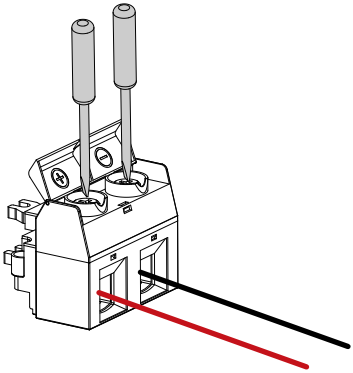

c. Close the cover.

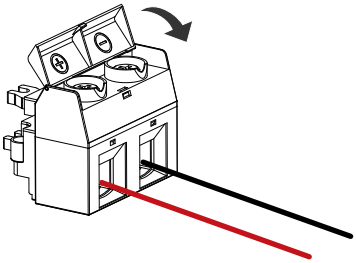

3.5.2 Connecting the Vertical Tower Unit

1. Connect the cables to the positive and negative busbar terminals of the vertical tower power supply unit, and then connect the cables to the positive and negative buses of the user's integrated cabinet.

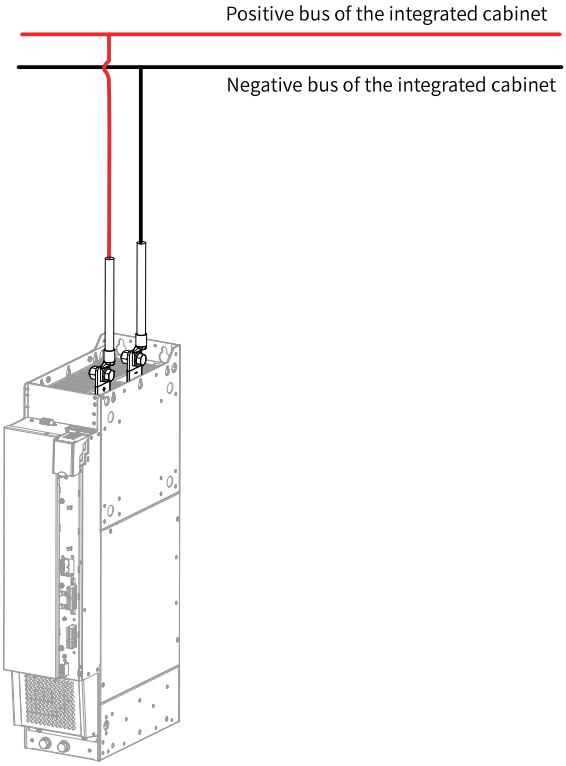

Vertical tower power supply unit

2. Connect the cables to the positive and negative busbar terminals of the vertical tower drive unit, and then connect the cables to the positive and negative buses of the user's integrated cabinet.

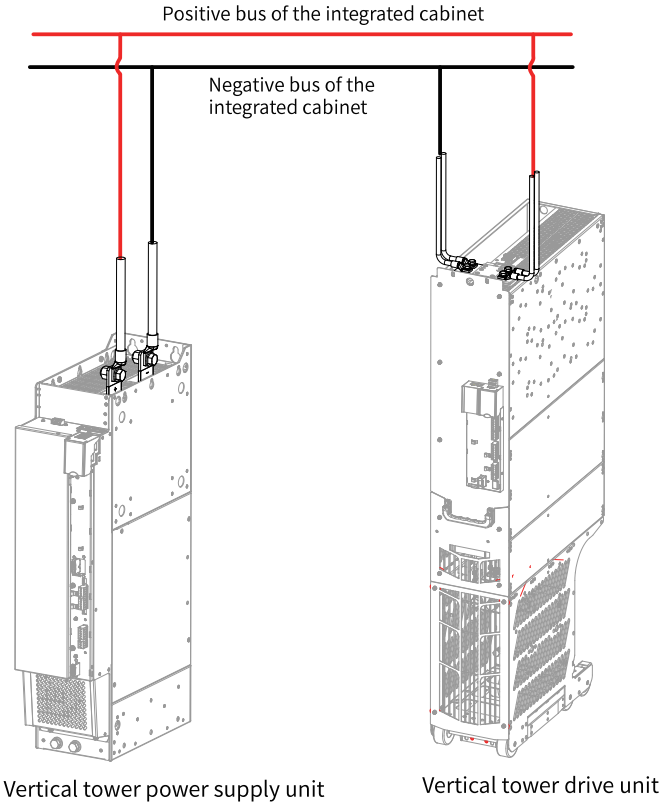

3.6 Installing the DC Soft Charge Unit (Optional)

If a drive unit fails, you need to power off the faulty drive unit and the power supply unit, replace with a new drive unit, and then power on the power supply unit and the new drive unit. To ensure that the power supply unit can operate without power-off during this case, you can install a DC soft charge unit for each drive unit.

The following figure shows the installation of the DC soft charge unit.

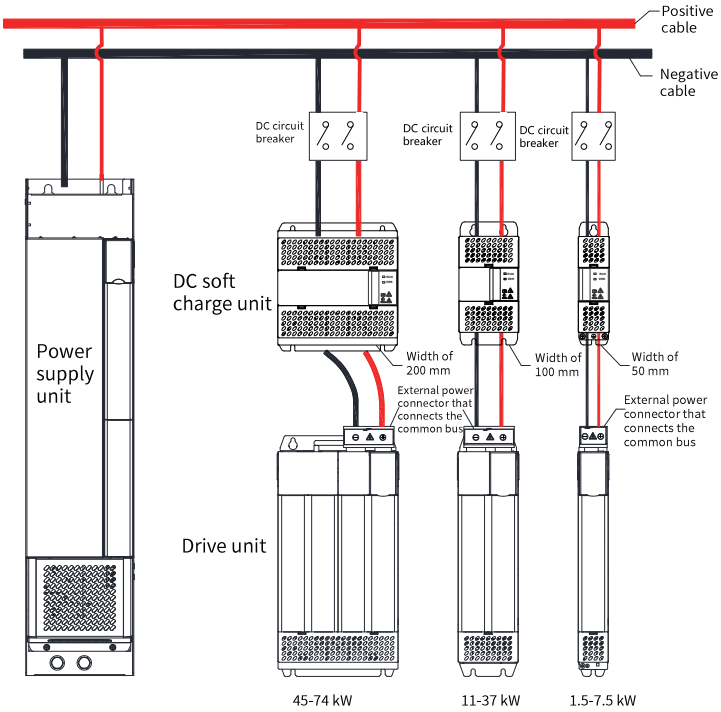

Figure 3-10 Installing the DC soft charge unit

3.7 Wiring

3.7.1 Wiring Booksize Units

1. Connect the power cable.
   Connect the input cable to the R, S, and T terminals on the power supply unit, and connect the output cable to the U, V, and W terminals on the drive unit.

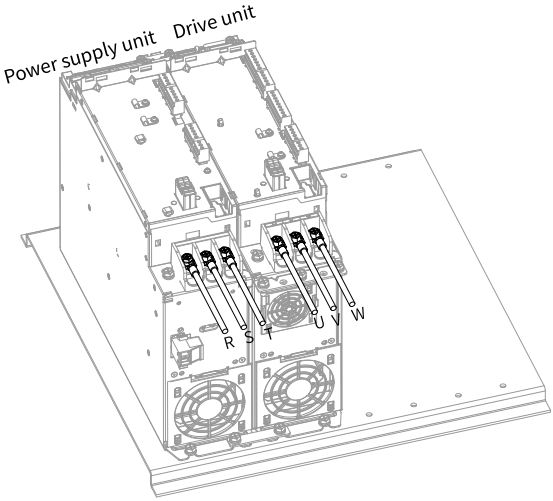

Note

When the AC drive is equipped with a grounding bracket of cable shield (optional), the shielding layer of the power cable needs to be fixed on the shielding bracket, as shown in the figure below.

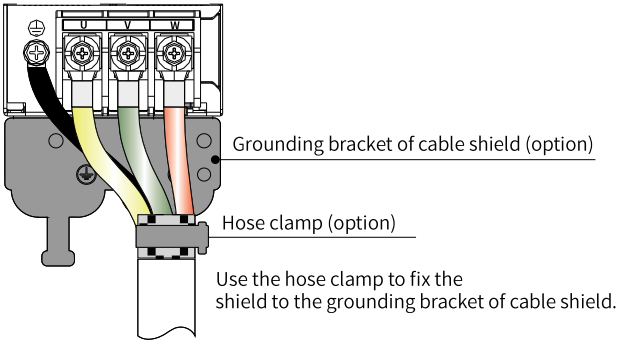

2. Connect the grounding cable.

   Connect the grounding cables of the power supply unit, drive unit, and motor.

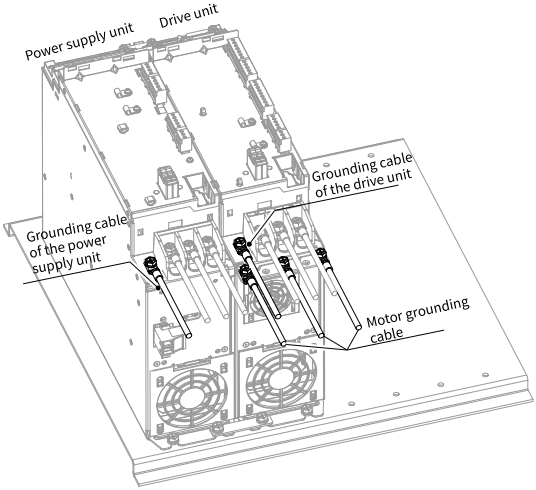

3. (Optional) For 22 kW and 45 kW power supply unit, connect the braking resistor cable.

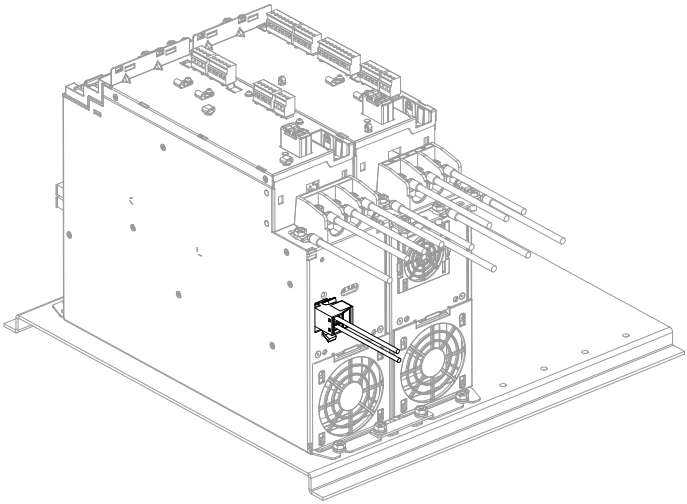

4. Connect the network cable.

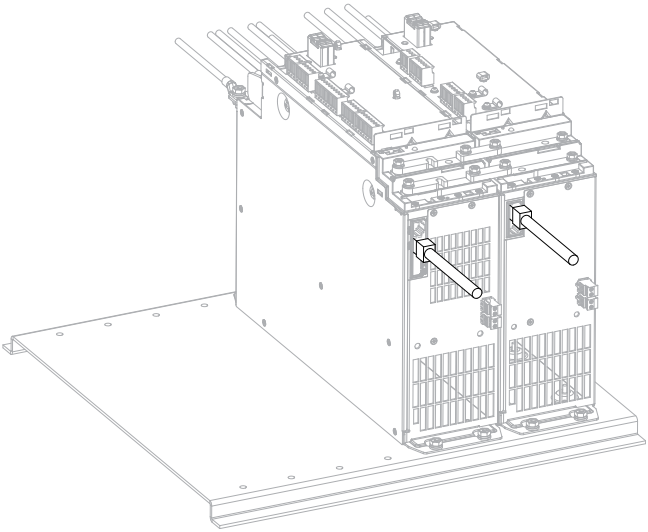

Figure 3-11 Network cable connection

5. Connect the input cable of the external 24 V power supply.

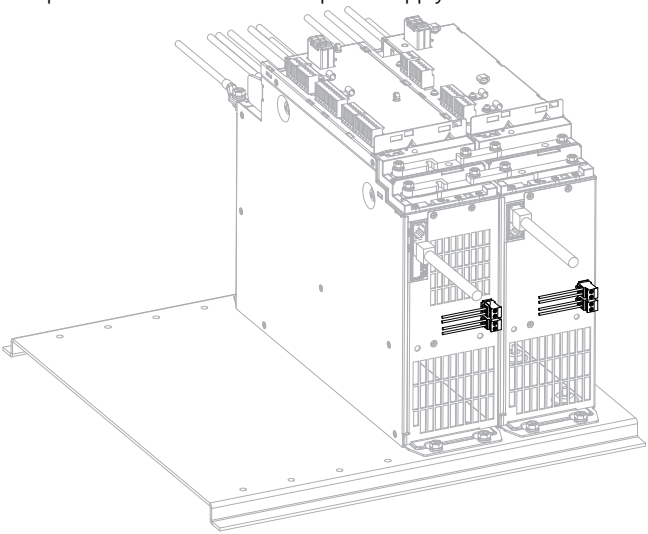

Figure 3-12 Connecting the input cable of the external 24 V power supply

6. Connect the control cable.
   Connect the control cable to the control terminal, ground the control cable shield through the crimping and grounding plate, and use the cable tie to fix the control cable and shield to the cable clip.

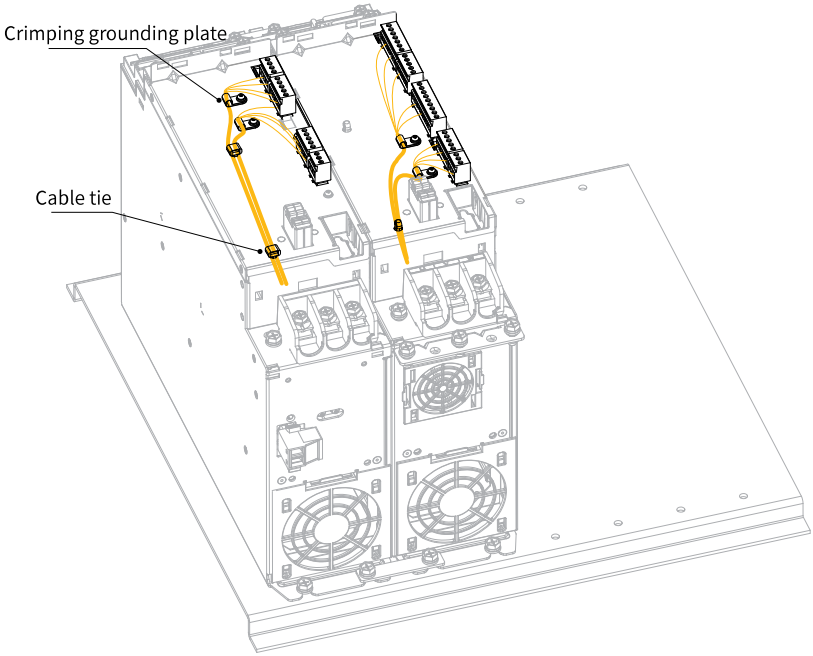

Figure 3-13 Connecting the control cable

3.7.2 Wiring the Vertical Tower Power Supply Unit

1. Connect the input cable to the R, S, and T terminals on the unit.

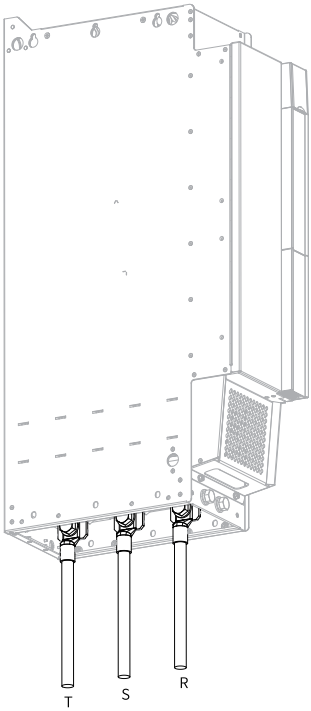

2. Connect the grounding cable.

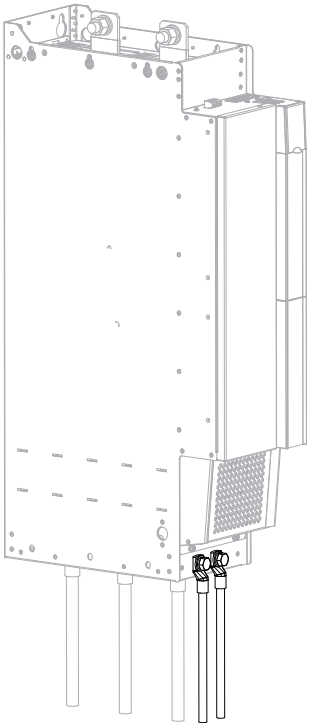

3. Connect the network cable and the input cable of the external 24 V power supply. The connection figure is similar to that of the booksize unit. For details, see *"Figure 3–11 Network cable connection" on page 53* and *"Figure 3–12 Connecting the input cable of the external 24 V power supply" on page 53*.
4. Connect the control cable. The connection figure is similar to that of the booksize unit. For details, see *"Figure 3–13 Connecting the control cable" on page 54*.

3.7.3 Wiring the Vertical Tower Power Drive Unit

1. Remove the closure plate of the front door.

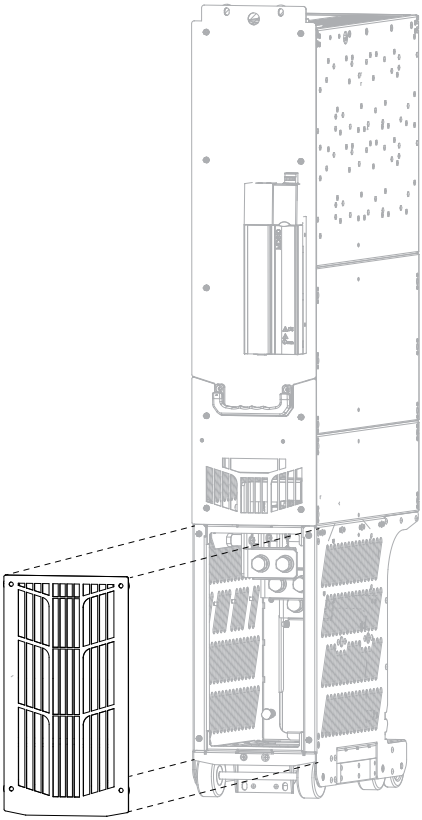

2. Connect two output cables to the U, V, and W terminals, respectively.

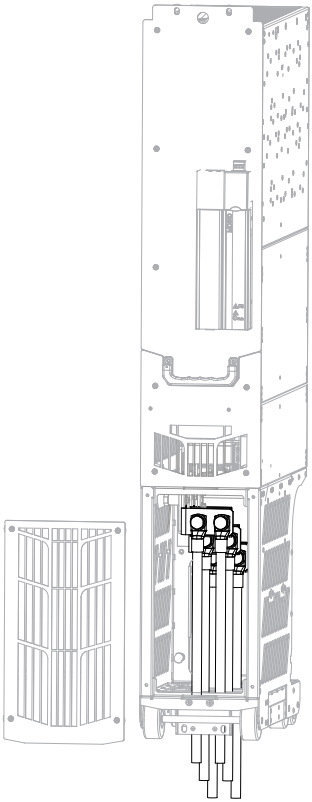

3. Install the closure plate of the front door.
4. Ground the fixing bracket of the drive unit.
   Because the fixing bracket at the bottom of the drive unit has the PE function, so there is no need to cable to the drive unit.

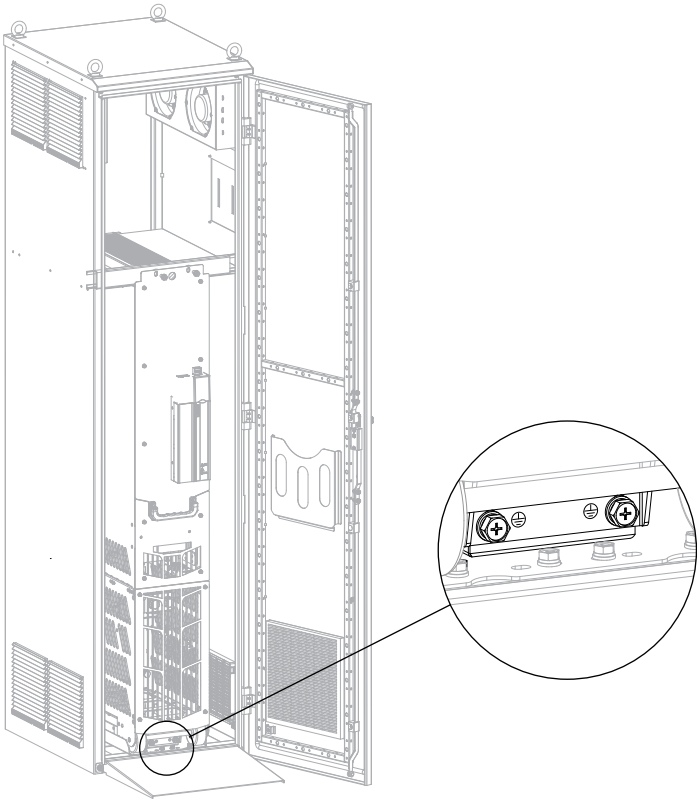

5. Connect the network cable and the input cable of the external 24 V power supply. The connection figure is similar to that of the booksize unit. For details, see *"Figure 3–11 Network cable connection" on page 53* and *"Figure 3–12 Connecting the input cable of the external 24 V power supply" on page 53*.
6. Connect the control cable. The connection figure is similar to that of the booksize unit. For details, see *"Figure 3–13 Connecting the control cable" on page 54*.

3.8 System Grounding Requirements

Connect the power supply unit, drive unit, and components such as the input reactor and filter to the PE copper bar by star connection, as shown in the following figure.

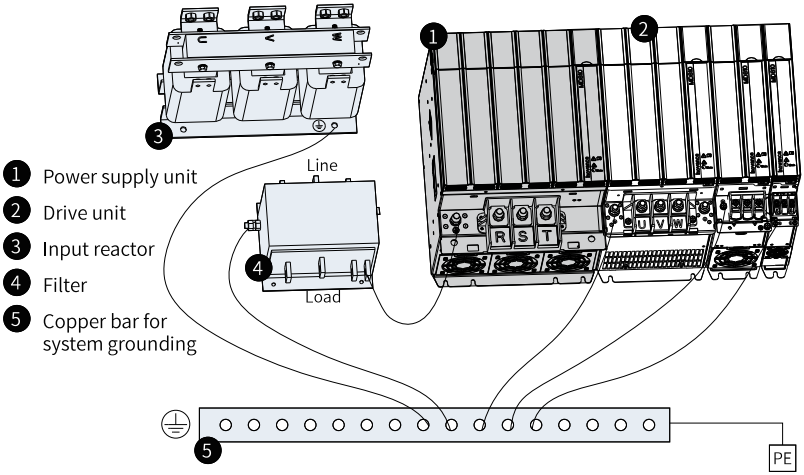

Figure 3-14 System grounding connection

3.9 Post-Wiring Check

After wiring has been completed, check the following items and ensure that each item has passed the inspection.

Table 3–1 Post-wiring inspection checklist

Number	Item	Pass (Yes or No)
1	The power input cables are connected to the R/L1, S, and T/L2 terminals.	
2	The motor input cables are connected to the U, V, and W terminals.	
3	The cross-sectional area of the main circuit cable meet the requirements.	
4	The heat-shrink tubes have been added to the conductors of the main circuit cables, and the tubes completely cover the cable conductors.	
5	The unshielded motor output cable is no longer than 150 m or the shielded motor output cable is no longer than 50 m. If the unshielded cable exceeds 150 m or the shielded cable exceeds 50 m, decrease the carrier frequency (F0-15) and add an output reactor (see the requirements for options).	
6	The grounding cables are connected correctly.	
7	The drive output terminals and control signal terminals are securely connected.	

Number	Item	Pass (Yes or No)
8	The braking resistor and braking unit (if used) are correctly connected. The resistance is proper.	
9	The control circuit signal cables are shielded twisted pair cables.	
10	The optional cards are connected correctly.	
11	If the drive is an STO model, confirm that the external 24 V power supply is connected properly.	
12	The control circuit cables are routed separately from the main circuit power cables.	
13	The protective cover removed from the power supply unit is reinstalled on the connector of the rightmost drive unit.	

3.10 Installing the Cover

① Align the power terminal cover with the latch position of the bus base, and then push the cover into place. 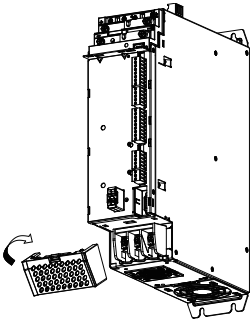	② Install the operating panel. 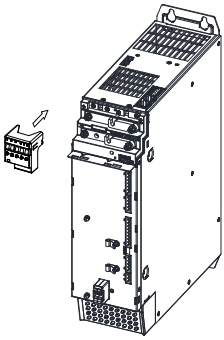
③ Align the upper cover to its latch position, push the cover into place, tighten the screw, and then close the operating panel cover. 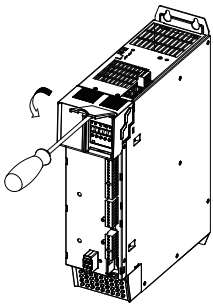	④ Insert the upper part of the lower cover into the upper cover, and then press the lower part of the lower cover to clasp it. 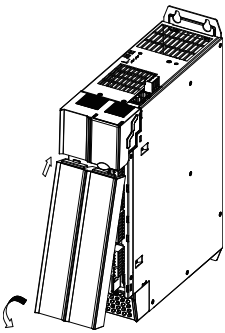
⑤ The installation is completed. 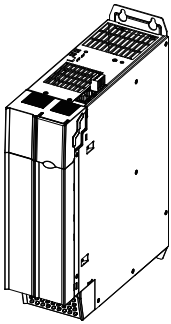	-

4 Appendix

4.1 Electrical Wiring Diagram

If a drive unit fails, you need to power off the faulty drive unit and the power supply unit, replace with a new drive unit, and then power on the power supply unit and the new drive unit. To ensure that the power supply unit can operate without power-off during this case, you can install a DC soft charge unit for each drive unit. For details, see *"Figure 4–2 " on page 64* .

Warning

- The drive unit has a built-in fuse. Never power on the drive unit independently without a DC soft charge unit installed. Otherwise, the drive unit will be damaged. *"Figure 4–1 " on page 63* describes the correct and incorrect wiring methods.
- In the application of common DC bus, never connect electrical switches, such as air switches or circuit breakers, in series in the bus to individually control the power-on and power-off of the drive unit. Otherwise, when the system is powered on, the drive unit will be powered on directly. This will damage the drive unit due to excessive inrush current.

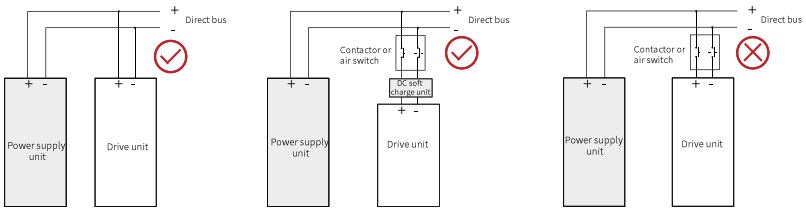

Figure 4-1 DC bus wiring

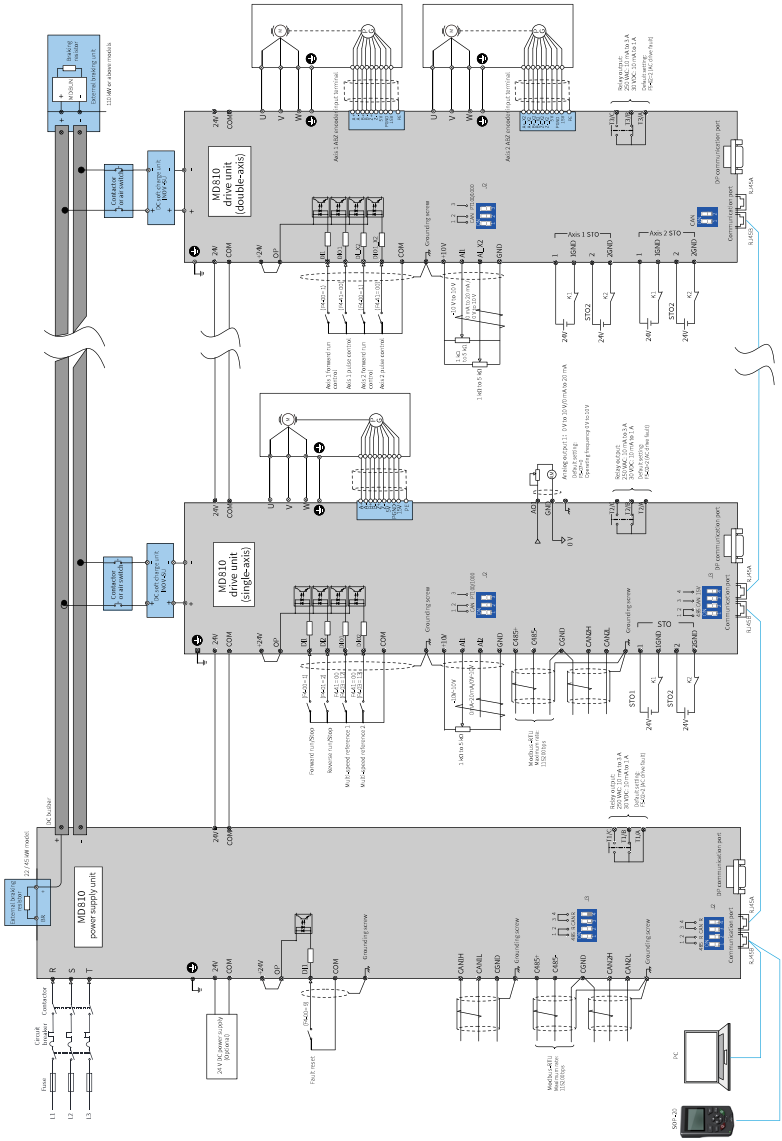

Figure 4-2 Electrical connection

19011961A02

Copyright © Shenzhen Inovance Technology Co., Ltd.

Shenzhen Inovance Technology Co., Ltd.

www.inovance.com

Add.: Inovance Headquarters Tower, High-tech Industrial Park,
Guanlan Street, Longhua New District,
Shenzhen 518000, P.R. China

Tel: (0755) 2979 9595 Fax: (0755) 2961 9897

Suzhou Inovance Technology Co., Ltd.

www.inovance.com

Add.: No.52, Tian E Dang Road, Wuzhong District, 215104,
Suzhou City, Jiangsu Province, P.R. China

Tel: (0512) 6637 6666 Fax: (0512) 6285 6720